2006 DEC 13 PM 12 53

B Survivor Information — Complete Section B if you are a Survivor or representing a Survivor.

B.1 **Name of Survivor:**

Mr./Mrs./Ms. First Name Middle Initial Last Name

B.2 **Social Security Number of Survivor:**

B.3 **Address of Survivor:**

Street Apt # P.O. Box

City State Zip Code

B.4 **Telephone Number of Survivor:** ( )

B.5 **Email Address of Survivor:**

B.6 **Relationship to Employee:** ☐ Spouse ☐ Son/Daughter ☐ Parent ☐ Grandparent ☐ Grandchild

Go to Part C

C Employee Information — Complete Section C UNLESS you are a labor organization.

C.1 **Name of Employee:**

Mr./Mrs./Ms. First Name Middle Initial Last Name

C.2 **Former Name of Employee** (e.g., maiden name/legal name change/other):

Mr./Mrs./Ms. First Name Middle Initial Last Name

C.3 **Social Security Number of Employee:**

C.4 **Address of Employee** (if living):

Apt # P.O. Box

City State CALL Zip Code

C.5 **Telephone Number of Employee:**

C.6 **Email Address of Employee:**

C.7 **Employment Information Related to Petition:**

C.7a Employee Number (if known):

C.7b Dates of Employment: Start 1962 End 1964

C.7c Employer Name: (NUMEC) NUCLEAR MATERIALS & EQUIPMENT CORP.

C.7d Work Site Location: APOLLO, PA
OFFICE BUILDING ACCOUNTING DEPARTMENT

C.7e Supervisor's Name:

Go to Part E

Name or Social Security Number of First Petitioner:

E Proposed Definition of Employee Class Covered by Petition — Complete Section E.

E.1 **Name of DOE or AWE Facility:** (NUMEC) NUCLEAR MATERIALS & EQUIPMENT CORP.

E.2 **Locations at the Facility relevant to this petition:**
NUMEC APOLLO OFFICE BUILDING
NUMEC APOLLO PLANT
NUMEC PARKS FACILITY

E.3 **List job titles and/or job duties of employees included in the class. In addition, you can list by name any individuals other than petitioners identified on this form who you believe should be included in this class:**
ALL NUMEC OFFICE EMPLOYEES ADMINISTRATIVE & CLERICAL
ALL NUMEC APOLLO PLANT EMPLOYEES
ALL NUMEC PARKS FACILITY EMPLOYEES

E.4 **Employment Dates relevant to this petition:**

Start	1957	End	1986	CONTAMINATED URANIUM FALLOUT FROM SMOKESTACKS
Start	1957	End	1986	PLUTONIUM FOUND IN STRUCTURE OF PLANT - 100 KILOS
Start	02/14/1963	End	URANIUM FIRE INCIDENT	

E.5 **Is the petition based on one or more unmonitored, unrecorded, or inadequately monitored or recorded exposure incidents?:** ☒ Yes ☐ No

If yes, provide the date(s) of the incident(s) and a complete description (attach additional pages as necessary):

ONE INCIDENT HAPPENED ON 02/14/1963. THIS WAS A WORKDAY FOR ME AND I WAS IN AND OUT OF THE OFFICE + PLANT IN APOLLO. AN UNCONTROLLABLE URANIUM FIRE ERUPTED INSIDE THE APOLLO PLANT DISPERSING 7 POUNDS OF RADIOACTIVE SMOKE AND DUST INTO THE AIR AND ONTO THE BUILDINGS, SIDEWALKS, WALKWAYS, PEOPLES CARS AND NEIGHBOR HOUSES. THE RADIATION WAS EQUIVILENT TO 20,000 CHEST X-RAYS ACCORDING TO NUCLEAR RESEARCHER WHO TESTAFIED IN A COURT OF LAW. THE PLAWTIFF NEIGHBORS WON A $36.7 MILLION DOLLAR CANCER LAWSUIT AGAINST NUMEC-ARCO-BABCOCK + WILCOX. ALL NUMEC WORKERS WERE AFFECTED. WORKERS WERE NOT AWARE OF THE SERIOUSNESS OF THE INCIDENT UNTIL IT WAS DECLASSIFIED YEARS LATER.
"LAWSUIT AGAINST ARCO, BWXT ROLLS ON" (INTERNET)

ALSO ON THE INTERNET ON WEB SITE "PITTSBURGH LIVE.COM" UNDER SPECIAL REPORTS CLICK BURIED LEGACY. THIS CITE

Go to Part F

Name or Social Security Number of First Petitioner: _____

A

HAS PLENTY OF REPORTS ON THE UNSAFE WORK VIOLATIONS AT THE NUMEC FACILITIES.

CONTAMINATED TIMECARDS

TENS OF THOUSANDS OF TIMECARDS BECAME HIGHLY CONTAMINATED WITH PLUTONIUM & URANIUM DUST BECAUSE OF THEIR PHYSICAL PRESENCE IN THE NUMEC APOLLO & PARKS PLANTS. WORKERS ALSO CONTAMINATED THEIR CARDS BY TOUCHING THEM WHEN THEY PUNCHED IN & OUT AT THE TIMECLOCK. THESE CONTAMINATED CARDS WERE THEN BROUGHT INTO THE OFFICE BUILDING SO CLERKS COULD WORK ON THEM FOR PAY PURPOSES. EVERY TIMECARD WAS FIGURED BY A CLERK WITH A PENCIL & ADDING MACHINE. ALL OF THE TIMECARDS LAYING ON DESKS RESULTED IN A CONTINUOUS RADIOACTIVE DUST OFFICE POLLUTION BY ABSORPTION, INHALATION, & INGESTION. THE ACCOUNTING DEPARTMENT STORED BOXES & BOXES OF HIGHLY CONTAMINATED TIMECARDS FROM THE PREVIOUS PAY PERIODS OVER THE YEARS.

TRIB TOTAL MEDIA JOBS CARS HOMES SHOPPING BUY & SELL Pittsburgh...
PITTSBURGH TRIB | TRIBUNE-REVIEW | PGHLIVE | STEELERSLIVE | KQV | WTAE Select a website

PittsburghLIVE.com

Lawsuit against ARCO, BWXT rolls on

By Mary Ann Thomas and Ramesh Santanam
VALLEY NEWS DISPATCH
Tuesday, August 27, 2002

COPYRIGHTED MATERIAL

BBBOnLine RELIABILITY PROGRAM

ROGER D. CALDWELL ARCHIVES

ON THE INTERNET HTTP://BIDUG.PNL.GOV/RDC.HTM.

AND SPECIFICALLY THE ARTICLE ENTITLED ENVIORNMENTAL MONITORING NEAR A MULTI-STACK URANIUM PLANT BY R.D. CALDWELL AND R.F. CROSBY THE ARTICLE HAS DIAGRAMS AND PICTURES OF THE NUMEC PLANT SHOWING FALLOUT PATTERNS FROM THE 124 SMOKE STACKS THAT WERE ONLY 40 FT TALL. THE OFFICE BUILDING WAS NEAR THE STACKS. WHICH HAD RAINCAPS ON THEM AND WOULD FORCE THE CONTAMINATED SMOKE DOWN. A CHART ON PAGE 23 INDICATES 10% OF THE OUTFALL WOULD HAVE CONTAMINATED THE OFFICE AREA WHICH WAS ONLY 30 FT HIGH. THE CHART ALSO SHOWS A MUCH HIGHER % OF CONTAMINATION THE CLOSER TO THE OUTSIDE PLANT WALLS AND ALMOST ALL AROUND THE WALKWAYS AND ENTRANCES. THE CONTAMINATION HERE IS THE SAME AS ON THE ROOF OF THE PLANT WHICH IS THE HIGHEST CONTAMINATION READING POSSIBLE. ROGER CALDWELL WORKED AT NUMEC AND CONDUCTED THESE TESTS MR CALDWELL IN HIS OWN WORDS STATED " A BETTER SET FOR DOWNWASH CANNOT BE IMAGINED." MR CALDWELL WAS AN OUTSTANDING HEALTH PYSICIST AND THE RECIPIENT OF MANY AWARDS IN HIS FIELD. MR CALDWELL DIED AT THE AGE OF 39. BEFORE MR CADLWELLS DEATH, HE RECORDED MANY HIGHLY RADIOACTIVE INCIDENTS AT NUMEC WHICH CAN BE FOUND ON THE INTERNET IN THE "RODGER D. CALDWELL ARCHIVES"

other toxic substances

Case Study: Radiation Poisoning Affecting Two Communities

BARON & BUDD, P.C.

MAIN OFFICE:
BARON AND BUDD, P.C.
3102 OAK LAWN AVENUE
SUITE 1100
DALLAS, TX 75219

OTHER OFFICES:
ILLINOIS
OHIO
LOUISIANA
NEW YORK

COPYRIGHTED MATERIAL

Have You Taken Remicade?
Experiencing side effects? Click or call, Nationwide: 1-800-856-6405

No Risk Lawsuit Funding
You only pay if you win! No application fee. No credit check

Ads by Google

PittsburghLIVE.com

MyPghLIVE Members Login Join Now, Subscribe

Search Now

Home | News | Sports | Opinion | Entertainment | Style | Discussion | Classifieds | Shopping

Special Reports

Home » News » Special Reports

Friday, December 24, 2004

Valley News Dispatch

Back to headlines

Larger Text Smaller Text

Business
Education
Elections
Health
Local News
Middle East Reports
Obituaries
Photo Gallery
Search News
Special Reports
UPMC in Italy
Historic Churches
Flight 427
A Region Recovers
Enterprise 2004
Sandrom's Gosly
Legacy
Deadly Secrets
2003 YMCA Banquet
Enterprise 2003
Transitions
Trib 10th Anniversary
One Year Later
A Call for Holy War
A Jury of Their Peers
Potential for Disaster
2002 Athlete Banquet
Ft. Pitt Survival Guide
Outstanding Young Citizens
Enterprise 2002
Homicide 2001
Legislative Spending
Trib: IX
Cost of Regionalism
Pension Investment
Immigrants
Financial Crisis
Athlete Banquet
2000 Census
Haiti
Web Reports
Weather

Site Index

Site Index

Tools

Check your email
Helpdesk
Contact Us

Local case has ties to Silkwood

COPYRIGHTED MATERIAL

Roger D. Caldwell Archives

- Roger Dale Caldwell, Ph.D., was a pioneering health physicist who worked at Brookhaven National Laboratory, in the Health and Safety Group at the Nuclear Materials and Equipment Corporation (NUMEC) in Apollo, Pennsylvania, during the 1960s and into the 1970s. Roger struggled with the challenges of protecting workers from intakes of uranium and plutonium and measuring how well protection had succeeded using bioassay, air samples, and workplace indicators. He showed that traditional indicators were not adequate, and developed new means to monitor workers that were adequate.
- He received the Health Physics Society's Elda E. Anderson Award in 1973. Dade W. Moeller's Citation for Roger Dale Caldwell appeared in *Health Physics* **25**(3): 216-218, and it contains biographical detail about Roger.
- Roger Caldwell left NUMEC in the early 1970s and joined the faculty of the Department of Radiation Health at the University of Pittsburgh Graduate School of Public Health. Some of the papers linked below were salvaged from the trash at Pitt in the early 1990s when the department began relocating off-campus. Others listed can be found in publications. The unpublished papers are reproduced here out of respect for the legacy of this forward-thinking individual. Most of the papers below were

contributed by Thomas E. Potter, who co-authored several of them. Tom has several fond memories of working with Roger.

- Roger Caldwell died in 1974 at the age of 39.
- Please contact the webmaster if you have any other Roger Caldwell papers to contribute to this archive.

- Caldwell RD. The Detection of Insoluble Alpha Emitters in the Lung. AEC Bioassay and Analytical Chemistry Conference, CONF-661018, Gatlinburg, Tennessee, October, 1966.

- Caldwell RD, Judd, WC. Alpha Spectrum Degradation by PuO_2 Particles. Presented at 1966 Annual Meeting of Health Physics Society, Houston, Texas. Abstract in *Health Physics* 12:1193 (1966).

- Caldwell RD and WC Judd. 1966. Gamma Spectrum Measurements and the Interpretation of Absorbed Dose During Plutonium Fuel Fabrication. Presented at the 1966 Meeting of the Health Physics Society, Houston, Texas; Nuclear Materials and Equipment Corporation, Apollo, Pennsylvania

- Caldwell RD and RF Crosby. 1967. Environmental Monitoring Near a Multi-Stack Uranium Plant. Unknown - date is estimated based on complete 1966 wind rose, Nuclear Materials and Equipment Corporation, Apollo, Pennsylvania. A variety of innovative approaches to air monitoring around a uranium nuclear fuel fabrication facility. The stack height for stacks with caps is very low. Atmospheric dispersion models were tried without a lot of success. Fallout collection trays

and sticky paper on telephone poles can be useful for finding unintended releases, but do not correlate well with air samples.

- Caldwell RD, TE Potter, and E Schnell. Bioassay Correlation with Breathing Zone Sampling. UCRL-18140. 1967. Berkeley, California, U.C. Berkeley. Proceedings of the 13th AEC Bioassay and Analytical Chemistry Conference at U.C. Berkeley. This is Caldwell, Potter, and Schnell's groundbreaking examination of the correlation of bioassay with air sampling. Roger Caldwell introduces the "Pig Pen Effect" wherein a worker creates the aerosol, so that breathing zone air sampling becomes critically important and general area air samples are shown to be not representative.

- Brodsky A, J Schubert, SS Yaniv, K Lamson, N Wald, R Wechsler, L Gumerman, and R Caldwell. Deposition and Retention of ^{192}Ir in the Lung After an Inhalation Accident. Abstract. Health Physics 13[6], 938. 1967.

- Caldwell RD, Schnell E. Respirator Effectiveness in an Enriched Uranium Plant. Presented at the 1968 American Industrial Hygiene Conference, May 13-17, 1968, St. Louis, Missouri.

- Potter TE, D Sgarlata, R Atkins, RD Caldwell, H Glauberman, and E Katine. 1968. A Technique for the Disposal of Highly Contaminated Glove Boxes. Presented at Health Physics Society 13th Annual Meeting, Denver, Colorado, June 16-20, 1968, Nuclear Materials and Equipment Corporation, Apollo, Pennsylvania. The NUMEC plutonium-238

facility contained 6 glove-boxes that had high levels of alpha contamination. Decontamination was deemed impractical, so they were to be disposed of. These glove boxes were decommissioned by filling them with fire-retardant polyurethane foam, and putting each in a steel drainage culvert. The void space in the culvert was then filled with foam. They were shipped on 3 flat-bed trailer trucks to Nuclear Fuel Service, West Valley, New York with an Atomic Energy Commission (AEC) escort. The trip was safely accomplished in 7 hours on snowy and icy roads.

- Potter TE and RD Caldwell. 1968. Calibration of a ^{210}Po-Be Neutron Source. December 3, 1968, Nuclear Materials and Equipment Corporation, Apollo, Pennsylvania.

- Caldwell RD, T Potter, and E Schnell. 1969. Radiological Emergency Experience in an Industrial Plutonium Plant. Date estimated from latest reference. Nuclear Materials and Equipment Corporation, Apollo, Pennsylvania. NUMEC had four serious incidents at its plutonium plant near Leechburg, Pennsylvania. These were 1) a dry box explosion on January 17, 1966 involving alpha contamination (^{239}Pu and ^{241}Am);2) a peroxide glove box explosion on November 30, 1966 involving ^{239}Pu and ^{241}Am; 3) an ^{192}Ir hot cell release on January 13, 1967; and 4) a hand amputation in a plutonium glove box on December 14, 1967 (the paper describes decontamination so a surgeon could re-attach the hand; alas, it has been reported later that the reattachment

surgery was not a success). Lessons learned are detailed in the paper.

- Caldwell RD and TE Potter. 1968. The Solubility of Inhaled Particles. Presented at the 14th AEC Bioassay and Analytical Chemistry Conference, Oct. 7-8, 1968, Nuclear Materials and Equipment Corporation, Apollo, Pennsylvania.

- Caldwell RD, RF Crosby, and MP Lockard. 1968. Radioactivity in Coal Mine Drainage. Presented at the 1968 Midyear Topical Symposium of the Health Physics Society, Nuclear Materials and Equipment Corporation, Apollo, Pennsylvania. Extensive environmental sampling (the authors describe canoe trips to collect the samples) shows that alpha radioactivity in the Kiskiminetas River near Apollo, Vandergrift, and Leechburg, Pennsylvania derives primarily from coal mine drainage that contains uranium leeched from the overburden of the coal seams. The technique of comparing samples upstream and downstream of coal mines is very cogent. The casual tone of this work makes it particularly delightful reading.

- Caldwell RD. Large-Scale Processing of Plutonium: Radiation Protection Under Commercial Conditions. "For Presentation Only" Probably about 1970, based on statement on page 2. Alas, the slides are not available at this time.

- Caldwell RD. 1972. "Evaluation of Radiation Exposure." in Health Physics Operational Monitoring, Vol. 1, eds. CA Willis and JS Handloser, pp. 563-612. Gordon and Breach,

New York. This paper is a classic!

- Caldwell RD. Working Paper. Fecal Sampling for Uranium Exposure. Date unknown; 1972 or later judging by references.

Pacific Northwest National Laboratory
Operated by Battelle for the U.S. Department of Energy

Return to: BIDUG Home Page
Contact: Dan Strom
Read about: Security & Privacy
Revised: 28 December 2004

Environmental Monitoring Near A Multi-Stack Uranium Plant

Roger D. Caldwell and Ronald F. Crosby
Nuclear Materials and Equipment Corporation
Apollo, Pennsylvania

Introduction

Every nuclear plant must demonstrate permissible radioactivity concentrations beyond its site boundaries. The nuclear industry almost traditionally limits stack discharges below permissible concentrations.(1) Because it is unequivocal, the Atomic Energy Commission encourages this approach. If the stack concentration is permissible, then certainly the concentration anywhere else will be less.

Evaluating off site concentrations at NUMEC's uranium plant proved difficult, but also quite necessary. You can appreciate the problem by examining Figure 1 which shows the plant setting. The NUMEC building, located inside the town of Apollo, shares three common walls with a steel truss fabricator. The whole complex of buildings was once the old Apollo Steel Plant. Houses crowd in as close as 200 feet and several hundred people live within a thousand yard half circle of the plant. Since the Kiskiminetas River runs close by, the whole town sets down in one of those typical, steep sided Appalachian river valleys. We're located about 30 miles northeast of Pittsburgh.

Stack Sampling

Figure 2 shows our stack sampling problem. There are 124 filtered stacks on our plant roof. You can also see the housings for six large unfiltered exhaust fans which provide comfort ventilation for the plant. About 10^5 CFM of filtered air is exhausted via the stacks and an equal amount of unfiltered air by the roof fans.

It is obviously impractical to monitor all stacks continuously. We have been sampling each stack four hours once a month. Even this minimal sampling keeps one full time technician busy.

Our stack sampling technique is standard: We insert an isokinetic probe into the center line of the stack and draw air at 40 l/min through an inline Whatman 41 filter paper. Recently we have successfully used Gelman Type E glass fiber filters. Where the stack discharge is corrosive or has high water vapor content, we bubble the sample through cascaded impingers. Several models of Gelman and Gast pumps have given us good service.

This intermittent stack sampling has not given us assurance that off site concentrations are acceptable. In the first place, the measured stack concentration frequently exceeds permissible levels. (^{234}U is the major isotope; its $MPC_a = 4 \times 10^{-12}$ µCi/ml or 8.8 d/m/M^3 ≈ .08 µgm/M^3).(2) Occasionally this is caused by a deficiency in air cleaning such as a poor filter seal. But more often the leakage is through the filter itself. So called "absolute" filters are merely highly efficient, allowing a small (< .03%)(3) but measurable quantity of aerosol to penetrate through the filter. Adding a second stage of absolute filtration would solve the problem, but is too costly.

Secondly, only 8 of the stacks are sampled on a given day. It is not reasonable to guess what the other 116 are discharging on that day.

Even total continuous sampling of all stacks would not guarantee permissible off site concentrations. For example, the off site concentration might exceed MPC_a because of the summed contributions from several stacks, each of which was discharging concentrations below MPC_a.

We could not apply the commonly used stack gas dispersion formulas[4], because our local topography is grossly unfavorable. The steel plant next door is twice as high as our plant. Rain hats cover many stacks. Figure 3 pictures graphically what rain hats do to exhaust plumes. The effective stack height of the capped stacks is easily half that of the uncapped stack. Most of our stacks do not reach above the peak of our roof; all are well below the recommended[5] 2-1/2 times the building height. A better set up for downwash cannot be imagined.

Off Site Sampling Methods

Our stack sampling experience forced us to begin monitoring the neighborhood for radioactivity. When we started, we were afraid we might find excessive levels. But, as we will show later, we had underestimated the dispersion capability of the atmosphere.

Since exposure of people was our controlling concern, we chose air sampling as the best monitoring technique. If our building had been surrounded with farm land, perhaps deposition on crops would be more important.

Continuous air sampling in the neighborhood posed several practical problems. Battery powered high volume air samplers are not commercially available. Even where there were electrical outlets, air sampling equipment could not be left unattended very long. Children cannot leave gadgets alone. Finally cost dictated a limit on the number of continuous samplers.

We decided to supplement whatever air samplers we could manage with fallout collectors. We thought that they would at least enable

us to extrapolate reasonably between air sampling locations.

Figure 4 shows our continuous environmental sampling network. There are seven fixed station air samplers, four of which are at stack height on the plant roof. The three off site continuous air samplers were placed north, east and south of the plant. Our industrial neighbors, Raychord and Nuclear Decontamination Corporation, kindly permitted us to locate samplers at their sites. Filters are changed daily and counted for alpha radioactivity.

We distributed 26 fallout collectors around the plant. After some study we settled on two types of dust fall collectors: Vertical gummed paper and 9 inch aluminum low wall pans (pie pans). The fallout collectors are assayed weekly for alpha radioactivity in an Eberline PC-4 large area proportional counter. Counts are scaled on an NCA RC-3 scaler-ratemeter.

To understand the plant effluent dispersion better, we air sampled at points between and beyond the fixed stations. We took two approaches to this supplementary sampling. First, many individual short period samples were grabbed whenever the wind behaved in an unusual way. One example is during downwash in the lee of a high wind. Second, we carried out sampling campaigns under typical wind conditions. After determining wind speed and direction, we set out high volume air samplers downwind at different distances from the plant. At the furtherest distance we also set out samplers crosswind. Most of these sampling studies were run for four hours.

Figure 5 depicts some of our equipment. One of us is cranking up a gasoline powered Richmond Sampler. It draws about 2.5 CFM

through 4 inch Whatman 41 or glass fiber filters. On the hand truck you see the 8 x 10 inch sample head of a Gelman Hurricane sampler. We carried several hundred feet of electrical cord to power our A/C samplers. The can-like object on the hand truck is an Anderson Cascade impactor. It has its own 12 volt battery powered D/C pump. Our assistant is changing one of the low wall pie pan fallout collectors. If you look carefully, you can see, on the telephone pole behind the car, one of our 4" x 8" vertical gummed paper dust collectors.

Local Wind Conditions

The Kiski valley is narrow, steep sided and prone to frequent inversions. At Apollo it runs north and south, across the prevailing westerlies. Since such valleys tend to distort wind flow(6), we felt it was necessary to measure local wind parameters. Consequently, we purchased a Taylor Instrument Co. Windscope, a combination potentiometer wind vane and generator anemometer. The windscope was mounted on the plant roof at stack height, about 40 feet high, and the readout located in the Plant Health and Safety Laboratory. Readings of wind speed and direction are taken every four hours, seven days a week.

The annual windrose for 1966, Figure 6, clearly demonstrates the valley's perturbation of the upper wind flow. Almost all wind flow in the valley is north and south, while the general wind direction, recorded at the Greater Pittsburgh Airport, is out of the west.

An inordinate proportion of wind speeds below 1 MPH worried us a great deal. We thought perhaps that the anemometer wasn't properly calibrated, so we ran several smoke drift and velometer tests, all of which confirmed the anemometer readings. A possible explanation is our

observation of frequent nocturnal calms. A lid goes on the valley at night and most of the low wind speeds are recorded then. Even at low wind speeds, the wind vane functioned, so we have added the wind direction during these calms to the windrose.

Because of the dramatic variation, we have plotted a Seasonal Windrose, Figure 7. The relative turbulence in winter and fall is much greater than during the spring and summer seasons. Most valley inversions occur in late spring, summer and early fall.

Dispersion From A Multi-Stack Source

Air sampling has demonstrated effective dispersion of the plant effluent. When averaged over eight hours, we have never measured off-site concentration above permissible limits. Ten minute grab samples, taken in the lee of the building, have occasionally given concentrations up to 25 $d/m/M^3$. However, another 10 minute sample, taken a short time later, might give a result a 1000 times lower. Since preventing accumulation of long term body burdens is the criterion for uranium health protection, averaging concentrations is completely justified.

The off site fixed station air samplers have consistently averaged below 10% of the MPC_a. The roof edge samplers, averaged over the year, show permissible concentrations. We have found the roof samplers very useful in detecting problem stacks. When we were sampling stacks monthly, it was possible to have a leaky stack go undetected for several weeks. The present arrangement allows us to find our problems much faster.

We intended our separate air sampling surveys to confirm an alternate diffusion model to common formulas such as Sutton's continuous

point source equation.[7] Since such formulas are for point sources, large errors can result in calculating ground level concentrations downwind from a multi-stack source. We proposed, Figure 8, treating all of the stacks as one large volume source.

Holland[8] has suggested that a volume source could be represented by postulating a "virtual point source" just far enough upwind to produce a gaussian distribution of material within the volume source. This postulation's value is permitting point source calculations to predict dispersion from a volume source.

The calculation of the distance to this virtual point source may be accomplished simply by taking advantage of a surprising observation: The magnitude of the cross wind spread at short range from a point source is independent of wind speed over a large range of wind speeds. Experimental results[9] show that an average cross wind spread of 20 degrees is observed for wind speeds of 2-12 meters/sec for distances up to one kilometer. This amazing fact can be better understood by considering the x^{2-n} term in Sutton's equation. At high turbulence the concentration varies almost as the inverse square of the distance downwind, at low turbulence at somewhat less than the inverse square. This means that at higher wind speeds, when a narrower plume is expected, higher turbulence tends to spread the plume. At longer distances the turbulence factor is not as important and the angle of spread does vary with wind speed. We found that 66 meters represented the distance to our virtual point source for most conditions.

Figure 9 shows why it's important to choose diffusion formulas carefully. Curve A represents the conventional form of Sutton's equation

for a 12 meter stack. B & C are volume source curves where the height of the virtual point source, h', is 12 and 24 meters respectively. The significant difference between point and volume sources is immediately apparent: Volume sources yield higher concentrations closer to the point of discharge. The point source formula predicts undetectable concentration 15 meters away. The fact is that concentrations measured here were the greatest.

The measured data do not really follow the volume source formula well. The different data points were gathered under widely separated times. We were lucky to get the data to stay on the graph. The data seems to follow an inverse power function rather than a product of power and exponential functions. It's as if there was no effective stack height at all. This is not surprising, considering the adverse topography and short stacks.

However, atmospheric dispersion is still effective. For a conservative wind speed of 1 meter/sec and a maximum discharge, Q, of 10^3 d/m/sec, the predicted averaged concentration will never exceed 1.6 d/m/M^3; this is less than 0.2 MPC_a.

Surface Deposition

Fallout collection is an elusive monitoring technique to interpret. Simple correlations between concentrations measured above a surface and the amount deposited per unit surface area with time do not exist.

Our luck was no better than others at finding a simple factor by which to multiply surface collection to obtain air concentration. So we chose to represent fallout collection separately. Figure 10 shows a typical weekly fallout contour. The contours are multiples of picocuries

per square foot per week. The contours account for 25% of the released activity; the rest is dispersed at a distance. There are several interesting features of the fallout contour. Fallout generally follows the wind pattern, the direction and extent being dependent on the direction and speed of the wind. The fallout collectors are useful for detecting otherwise unknown releases. For instance, the local contours around NDC resulted one week from unwittingly burning contaminated scrap clothing. No excessive levels resulted, but the fallout network enabled us to warn NDC and the error was corrected before it got out of hand.

We experimented considerably with gummed paper. Cylindrical collectors[10] were recommended to us, but we found the directionality benefit was lost. Apparently due to small particle size (AMAD≈0.3-3 microns), the collection on the back of the cylinder was as great as in front. This led us however to use vertical collectors. It is very simple to staple gummed paper to a telephone pole.

One of the surprising things to us was the prevailing presence of alpha activity in the environment. Fallout collectors, located many miles away, often showed activity levels as high as 20 pCi/ft^2/week. Thus the effect of uranium plant fallout is lost within a few hundred yards of the plant.

Another interesting feature of the remote fallout collectors illustrated something about the mechanism of fallout collection. Collectors located near well-traveled roads always give higher results than those away from roads. We think this happens because radioactive dust doesn't settle out; it impacts onto surfaces. The more turbulence in an area the higher the collection rate of the available radioactivity. This is why vertical

gummed paper works as well as horizontal adhesive. Of course, the reason stems from the small particle size and resultant low settling velocities.

Kiskiminetas River Survey

An appreciation of the magnitude of natural radioactivity levels can be gained from a survey we made in May, 1966. For several years we have sampled the Kiskiminetas River at three bridges, one above our uranium plant, one below the uranium plant and above our plutonium plant and another below the plutonium plant. The 1966 average is given in the following table:

Table 1

Alpha Activity Levels
Kiskiminetas River - 1966

Location	Averaged Concentration pCi/liter	Concentration Range, pCi/l
Apollo	13.14	.3 - 102.7
Vandergrift	13.36	.45 - 101.0
Leechburg	10.77	.9 - 46.0

Since the average flow in the Kiski River is 3080 cubic feet per second, the Apollo concentration represents about a curie per day. The mystery of all this radioactivity upstream proved irresistable to us, so in May, 1966, we took a two day survey by canoe of the Kiski watershed. Figure 11 show the sample locations. The results are in Table 2.

The Kiski area contains a number of coal mines, whose drainage creates a high acid content (pH = 2-5) in the Kiskiminetas River. Several geological publications[11,12,13] have described the association of uranium and coal in Western Pennsylvania. Estimates of uranium in coal ranged from

10-140 ppm. Consequently, we also surveyed water from several mines. The term, boney pile, refers to the overcover removed from coal.

We found striking increases in radioactivity from coal mine drainage. The levels are appreciable, considering that the MPC_W for unidentified radionuclides is 10 pCi/l. We subjected several samples to radiochemical analysis and found the activity predominantly from $^{234,238}U$; less than 10% was from ^{226}Ra. Thus the mines do exceed the MPC_a, but not so much that a truly dangerous circumstance exists.

Conclusion

We have demonstrated that the NUMEC uranium plant effluent produces permissible off-site radioactivity concentrations. Even with adverse topography, cramped site boundaries, short stacks and unfavorable winds, the lower atmosphere dilutes our stack concentrations by factors of 100-1000. Restricting stack effluents to MPC_a is unnecessary.

We have also shown that nature's radioactivity can be appreciable. Our natural radiation environment must be understood if we are to have reasonable and realistic regulation of radioactive waste discharge.

Table 2

Kiskiminetas River Radioactivity Survey
May, 1966

Sampling Point	Concentration pCi/liter	Remarks
River 1	2.7	Allegheny River
" 2	18.9	
" 3	26.9	
" 4	45.2	
" 5	25.5	
" 6	28.2	
" 7	142.7	Old mine drainage
" 8	16.8	
" 9	33.6	
" 10	17.3	
" 11	46.4	Downstream of principal mine drainage
" 12	119.1	" " " " "
" 13	81.8	" " " " "
" 14	11.8	
" 15	3.6	
" 16	14.5	
" 17	16.4	
" 18	17.3	
" 19	12.7	
" 20	1.8	Upstream of all mines
Stream A	32.7	Mine drainage
" B	30.5	" "
" C	21.6	
" D	29.3	
" E	20.5	
" F	12.7	
" G	1.0	
" H	2.9	
" I	1.0	
" J	163.6	Downstream of Boney Pile
" K	1.0	
" L	10.0	
" M	15.5	
" N	4.5	Upstream of all mines
" O	3.4	" " " "
" P	17.3	Reservoir, some mine drainage
Mine #1	174.1	
Mine #2	120.0	
Boney Pile	180.0	Shale overcover of coal

References

1. A. J. Breslin, Toward More Realistic Systems for the Discharge of Radioactive Airborne Wastes, Health Physics, Vol. 12, No. 10, pp. (1496)-(1501), October 1966.

2. Code of Federal Regulations, Title 10, Part 20, Appendix B.

3. W. J. Smith, N. F. Surprenant, Properties of Various Filtering Media, Third AEC Air Cleaning Conference, LASL (1953).

4. Meteorology and Atomic Energy, U.S. Government Printing Office, Washington, D.C. (July 1955).

5. Industrial Ventilation, A Manual of Recommend Practice, American Conference of Governmental Industrial Hygienists, Ninth Edition, 1966.

6. Air Pollution Control Manual, Part 1 - Evaluation, 1960, American Industrial Hygiene Association.

7. M. Eisenbud, Environmental Radioactivity, p. 76, McGraw-Hill, 1963.

8. J. Z. Holland, AEC Report ORO-99, 1955.

9. F. Pasquill, Atmospheric Diffusion, p. 134, Van Nostrand, 1962.

10. W. L. Pritchard, C. E. Schumann and C. W. Gruber, The Role of Surface Geometry in Particle Collection Upon Adhesive Materials, Presented at the 1966 American Industrial Hygiene Conference, Pittsburgh, Pa., May 1966.

11. J. F. McCauley, Uranium in Pennsylvania, Pennsylvania Geological Survey, Bulletin M43, 1961.

12. J. C. Ferm, Radioactivity of Coals and Associated Rocks in Beaver, Clearfield and Jefferson Counties, Pennsylvania, U.S. Geological Survey, TEI-468, January 1955.

13. E. D. Patterson, Radioactivity of Part of the Bituminous Coal Region of Pennsylvania, U. S. Geological Survey, TEI-49, November, 1954.

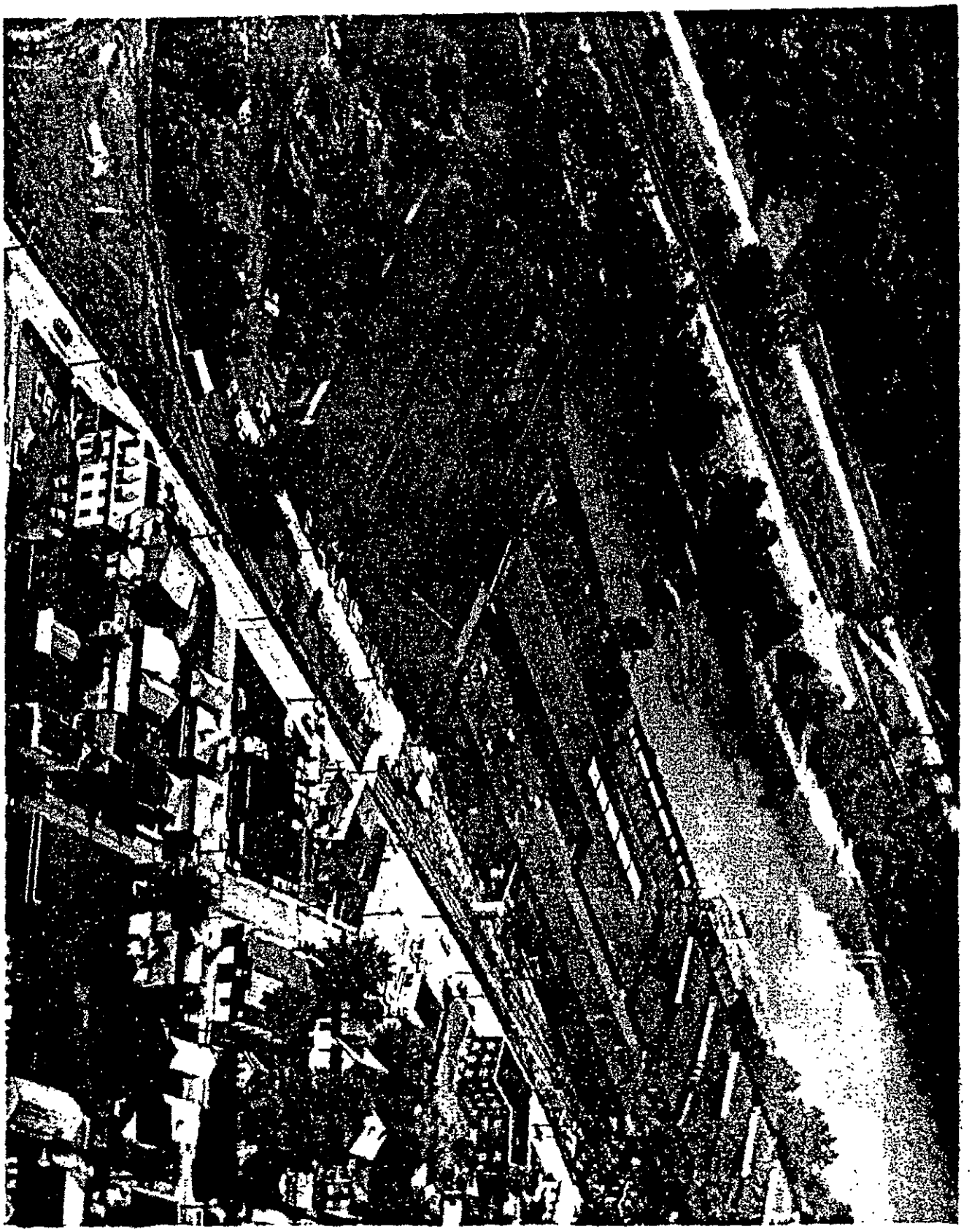

5
16
19

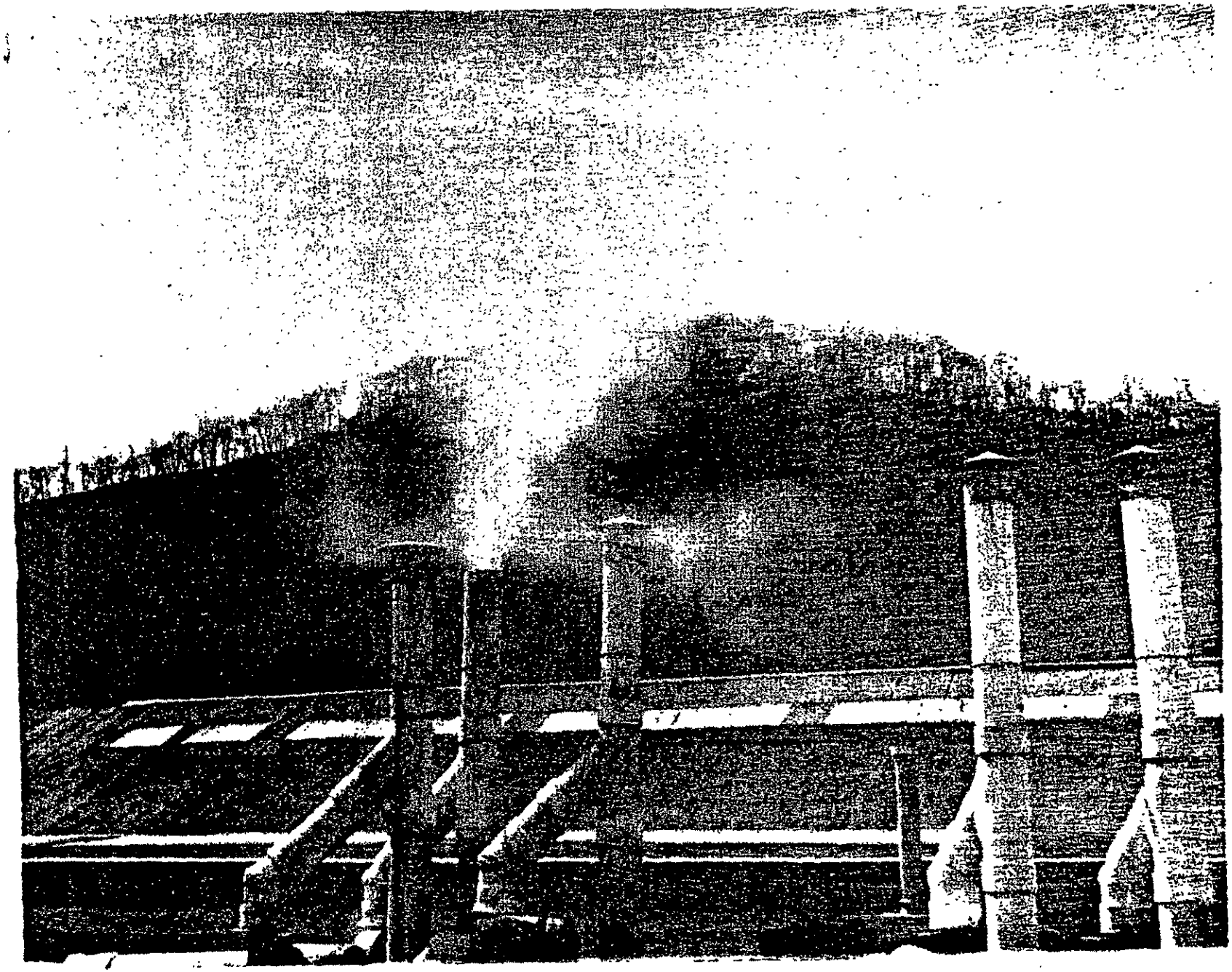

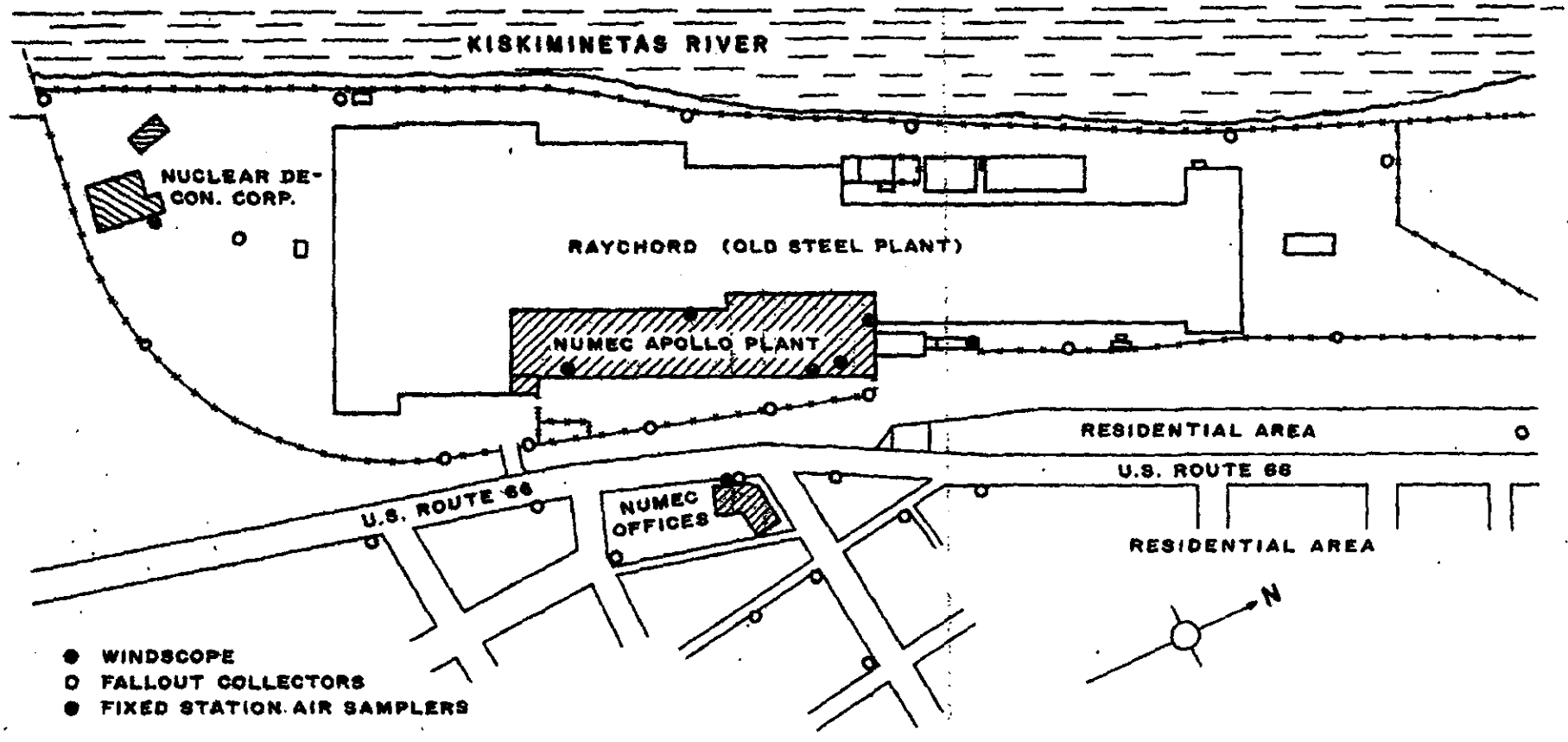

ENVIRONMENTAL MONITORING NETWORK
NUMEC APOLLO PLANT

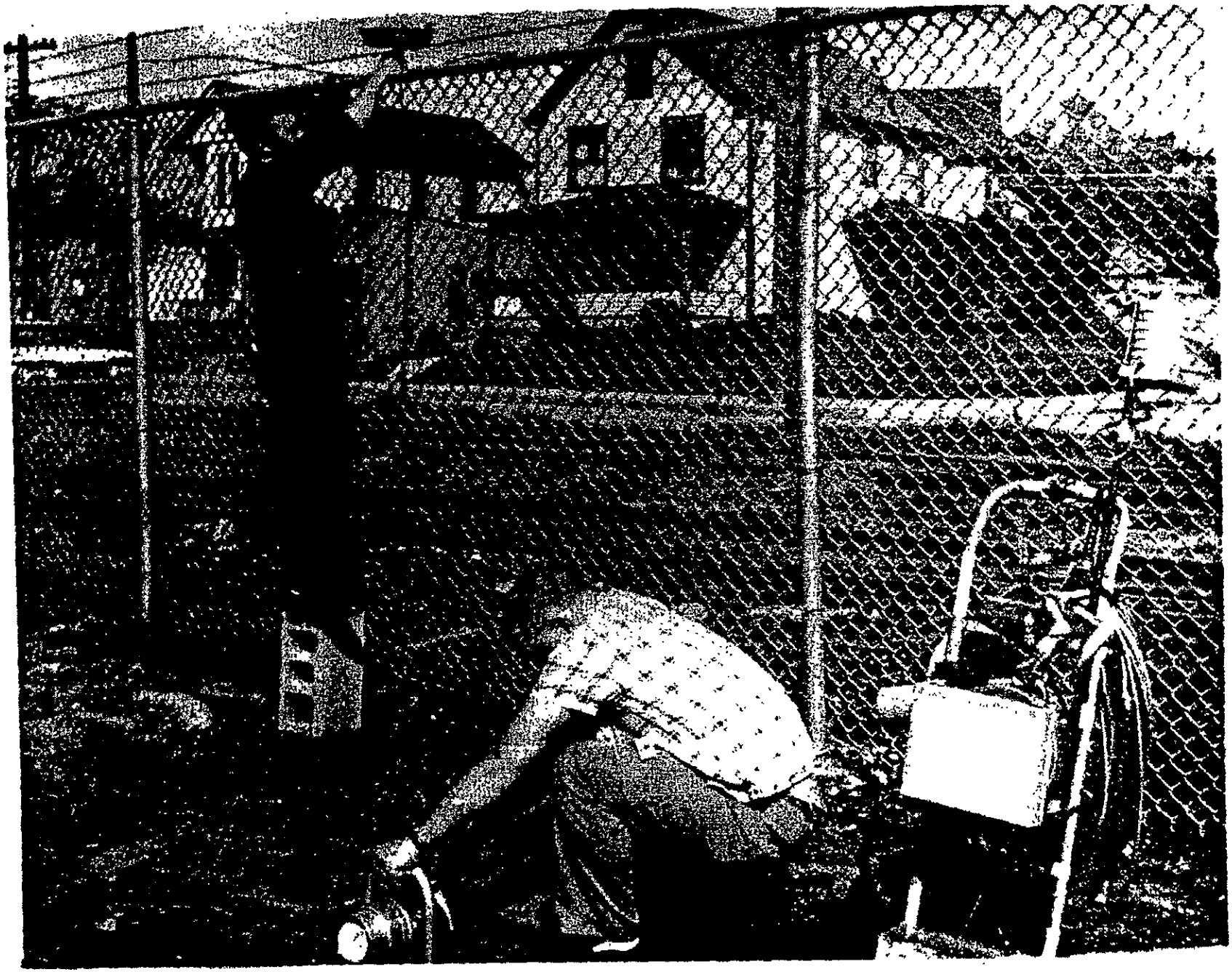

SEASONAL WIND ROSE - APOLLO, PENNSYLVANIA

HEIGHT OF MEASUREMENT = 40 FEET YEAR-1966

SCALE = MILES PER HOUR x FREQUENCY

1.25 MILES PER READING

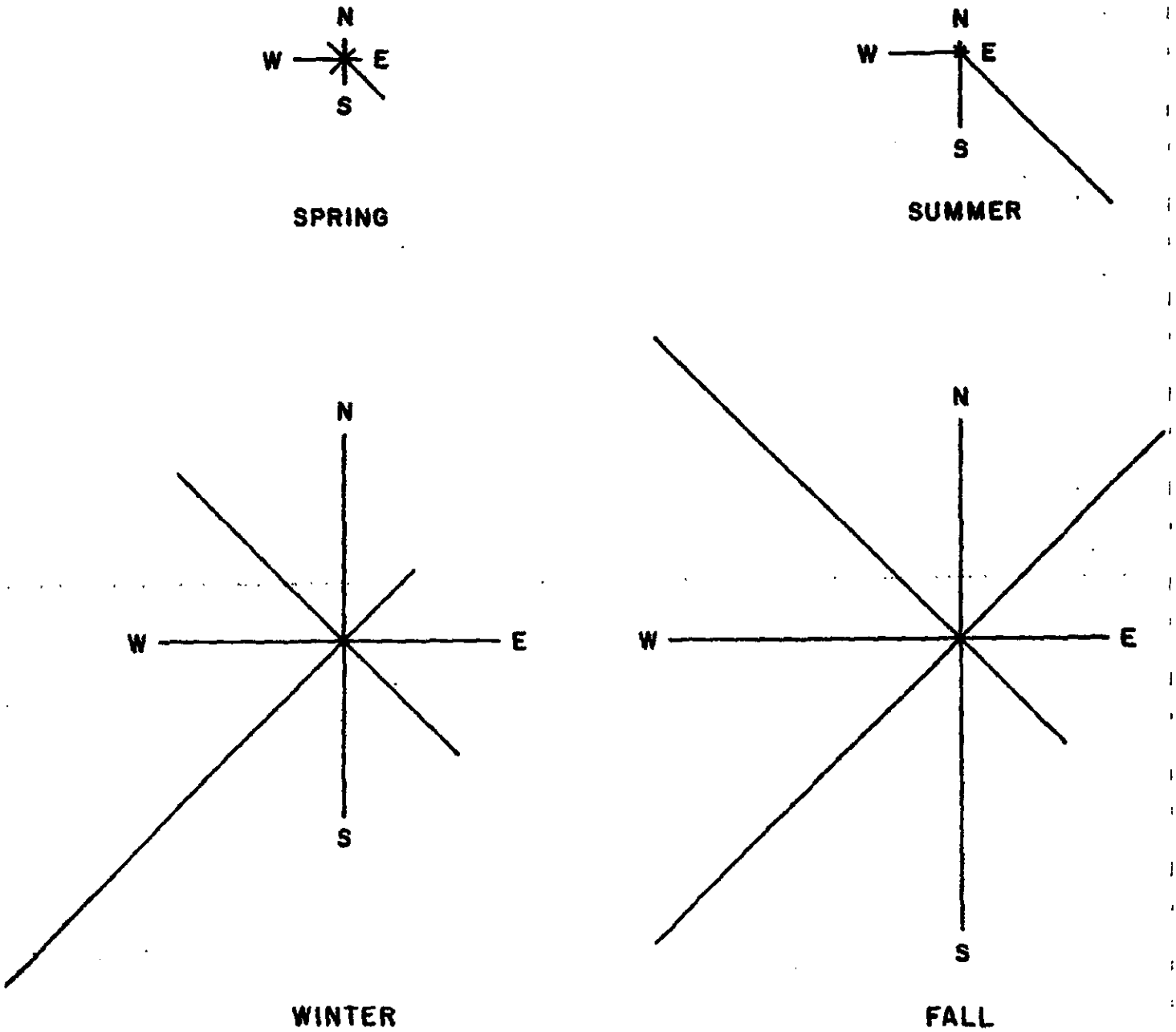

WIND ROSE - APOLLO, PENNSYLVANIA

HEIGHT OF MEASUREMENT-40 FEET YEAR-1966

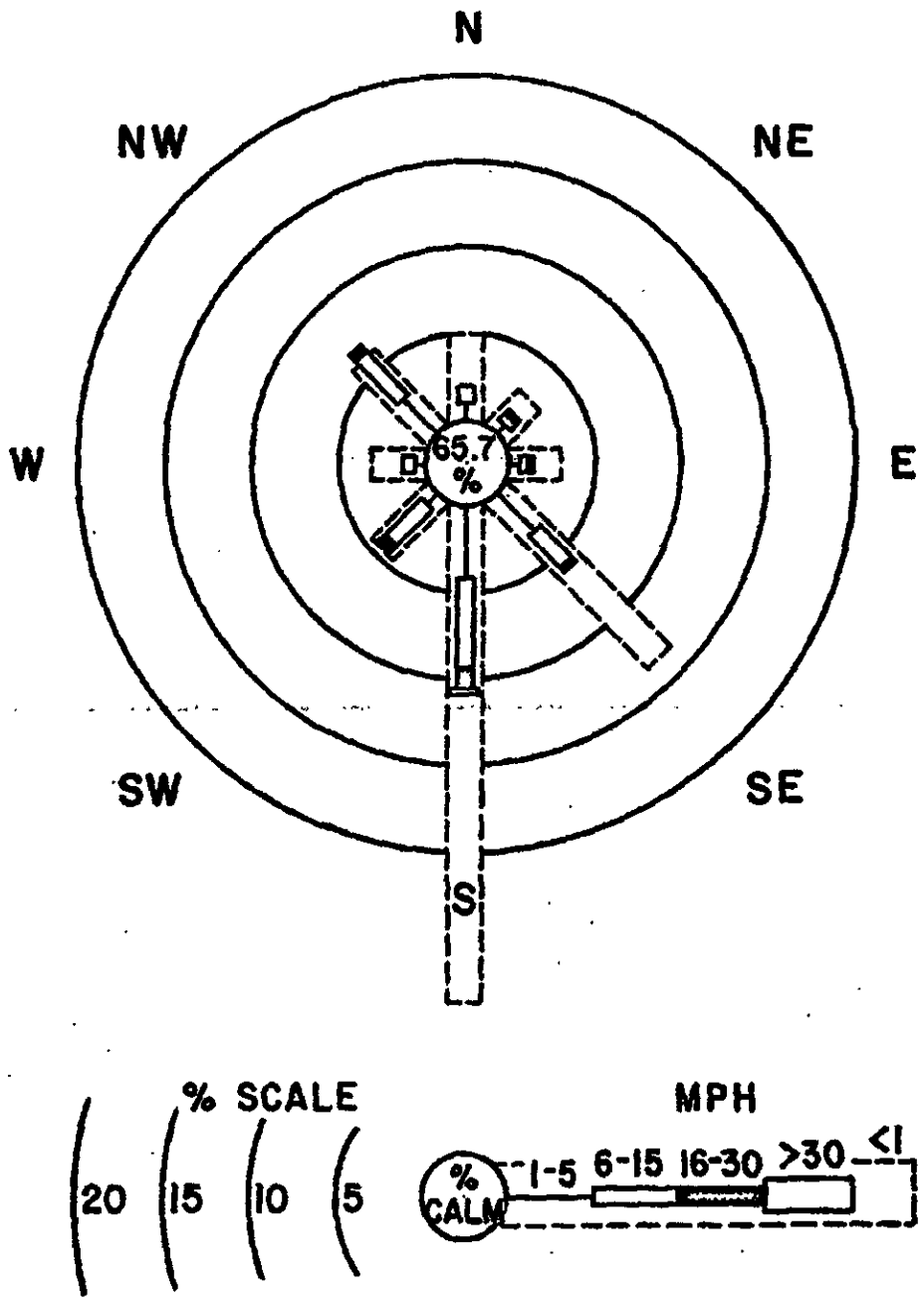

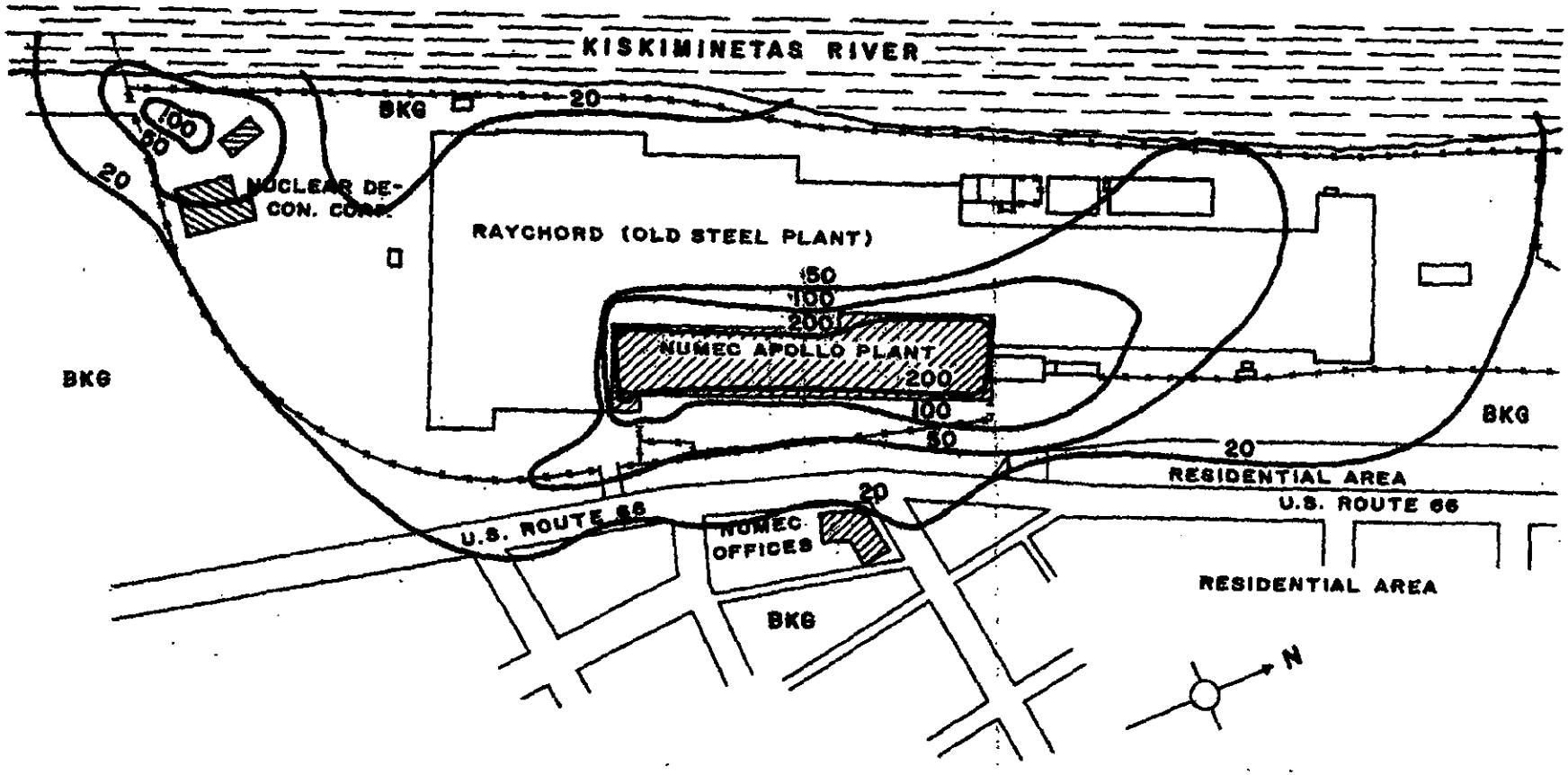

TYPICAL WEEKLY DEPOSITION - PICOCURIES/FOOT^2/WEEK
NUMEC APOLLO PLANT

CONTINUOUS VOLUME SOURCE FORMULA FOR GROUND LEVEL CONCENTRATION AT DISTANCE x FROM A MULTI-STACK PLANT

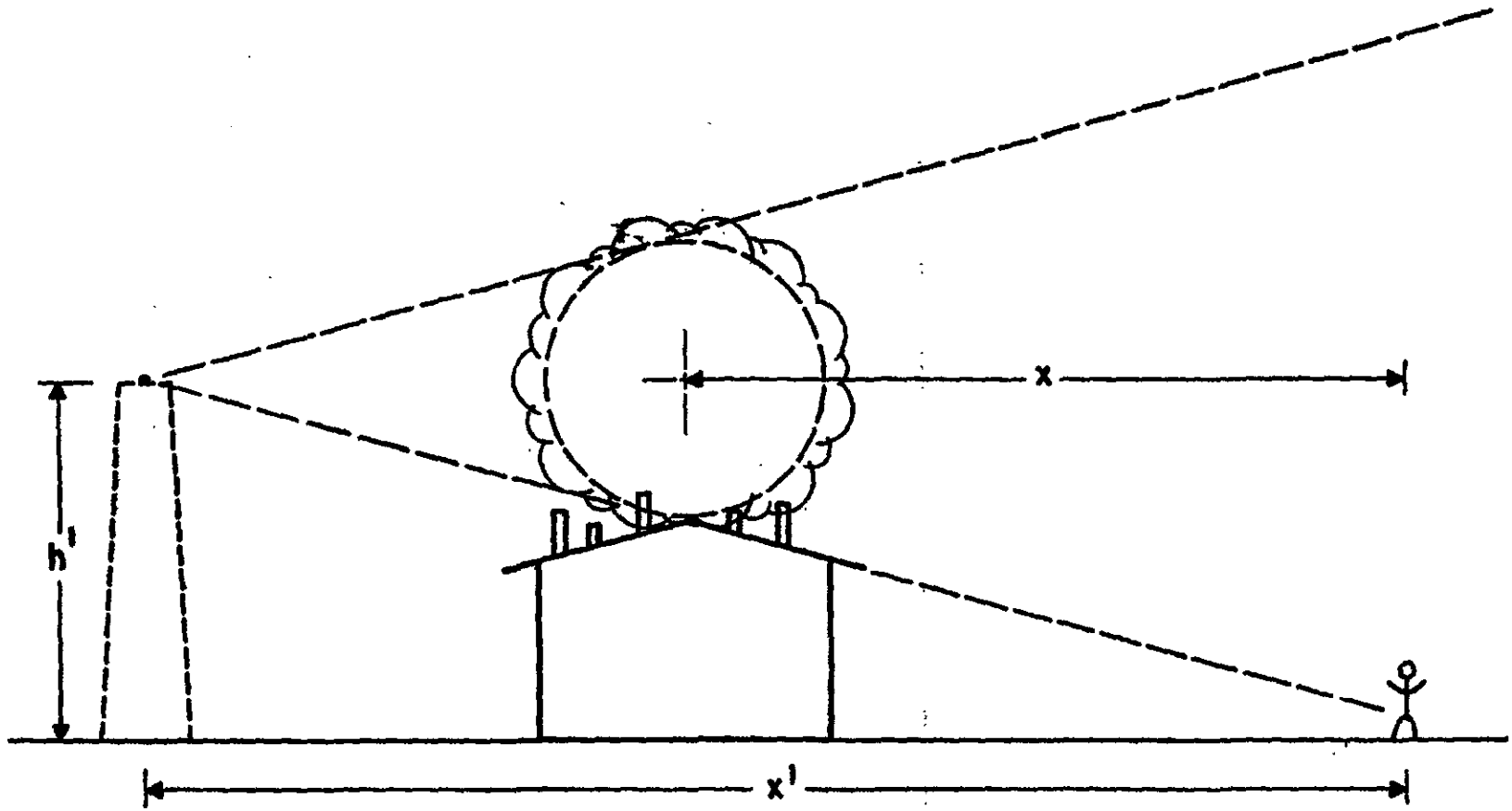

$$X = \frac{2Q}{\pi C_Y C_Z u x'^{(2-n)}} e^{-\frac{h'^2}{C_Z^2 x'^{(2-n)}}}$$

X = GROUND LEVEL CONCENTRATION

GROUND LEVEL DOWNWIND DIFFUSION
MULTI-STACK URANIUM PLANT

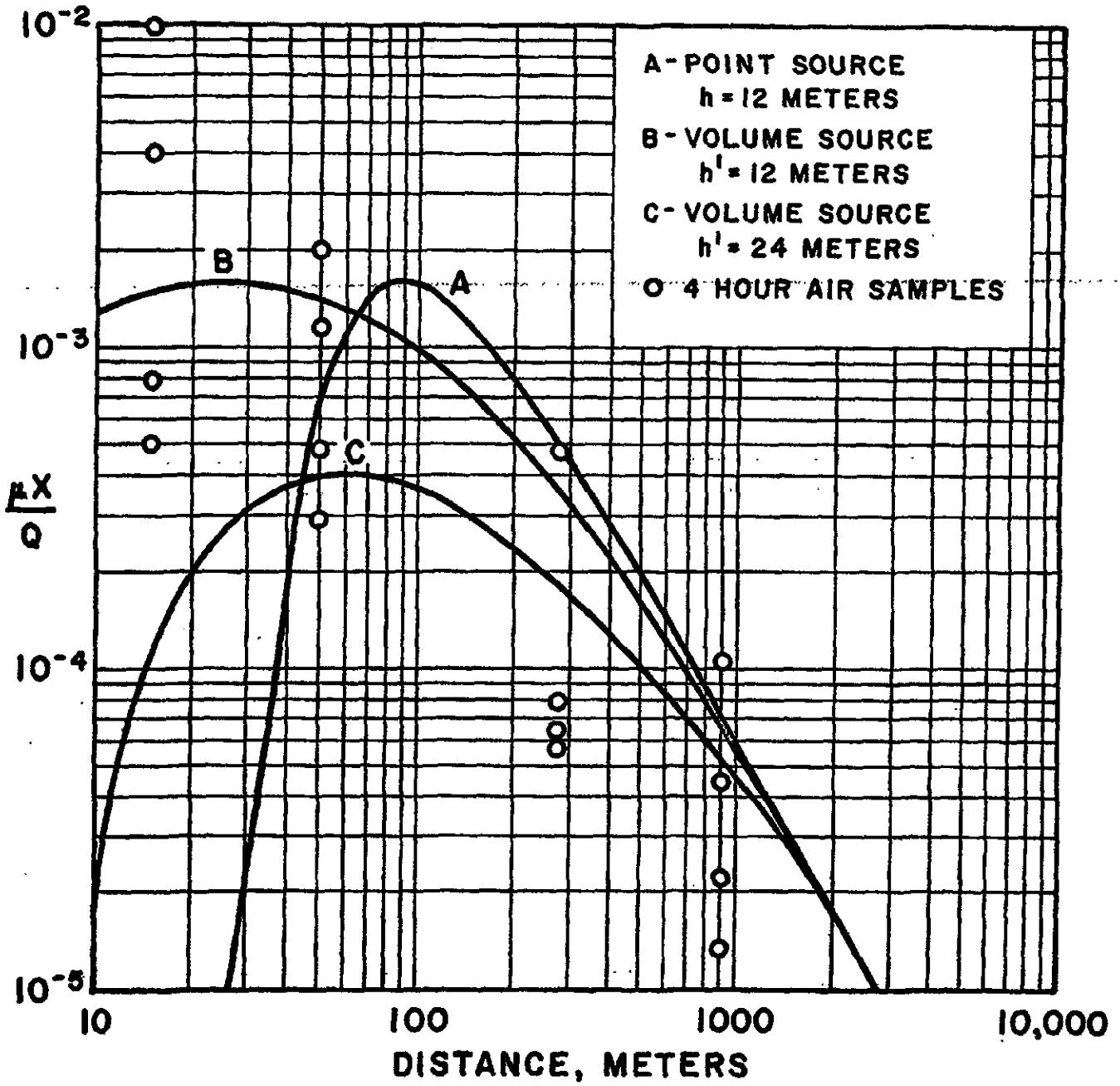

RADIOACTIVITY SURVEY - KISKIMINETAS RIVER

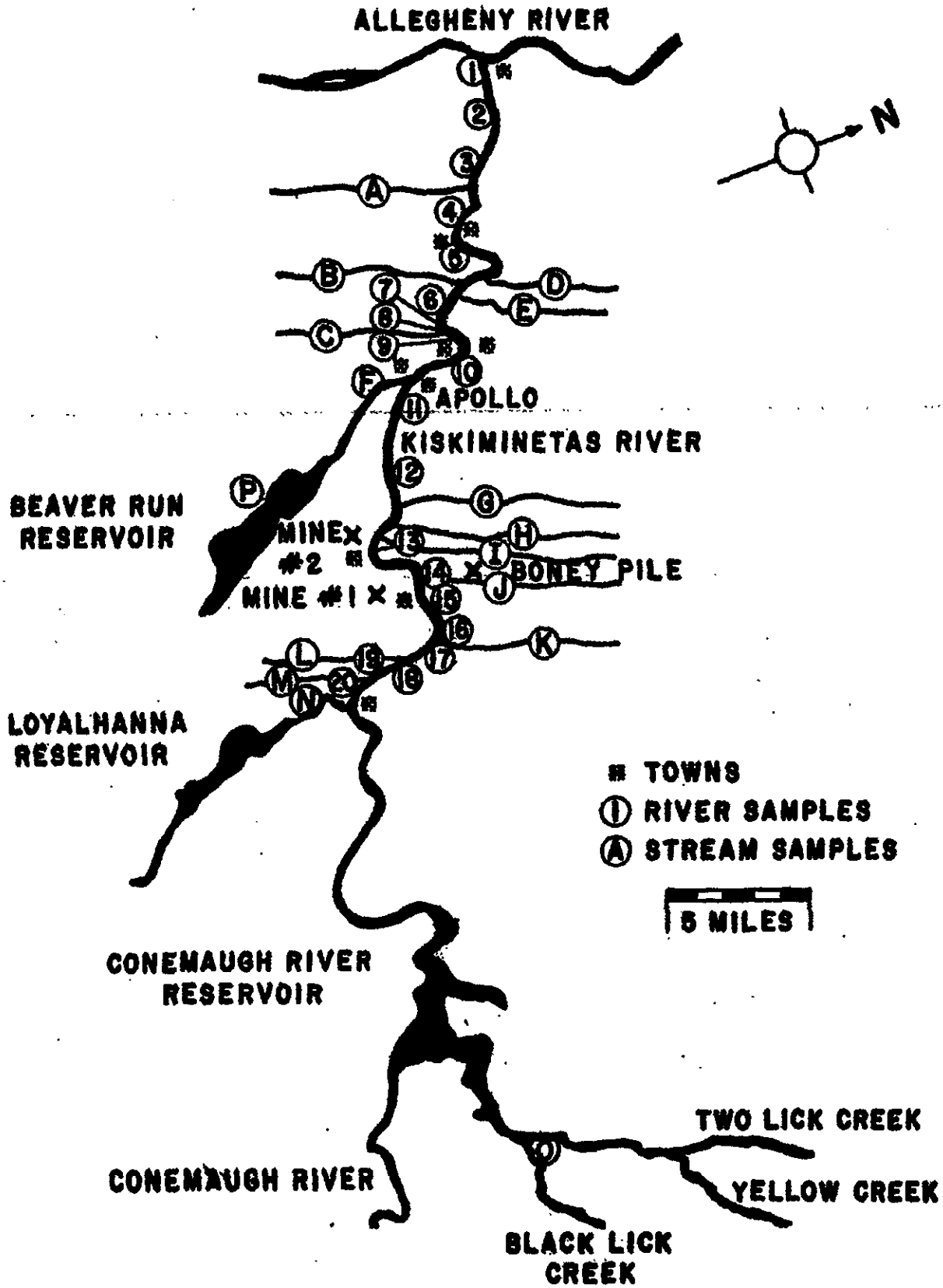

F Basis for Proposing that Records and Information are Inadequate for Individual Dose - Complete Section F.

Complete **at least one** of the following entries in this section by checking the appropriate box and providing the required information related to the selection. You are not required to complete more than one entry.

F.1 ☐ I/We have attached either documents or statements provided by affidavit that indicate that radiation exposures and radiation doses potentially incurred by members of the proposed class, that relate to this petition, were not monitored, either through personal monitoring or through area monitoring.

(Attach documents and/or affidavits to the back of the petition form.)

Describe as completely as possible, to the extent it might be unclear, how the attached documentation and/or affidavit(s) indicate that potential radiation exposures were not monitored.

NUMEC OFFICE WORKERS DID NOT WEAR DOSE BADGES IN THE OFFICE BUILDING. I HAVE NO DOSIMETRY REPORTS IN MY EEOICPA CLAIM FILE.

THERE WAS A URANIUM TESTING LABORATORY IN THE SMALL 3 STORY OFFICE BUILDING UNDERNEATH THE ACCOUNTING DEPARTMENT. THE OFFICE BUILDING WAS CAREFULLY DECOMMISSIONED BECAUSE OF RADIOACTIVE CONTAMINATION IN THE FLOORBOARDS & DRAINS. >30 PCI V/G.

F.2 ☐ I/ We have attached either documents or statements provided by affidavit that indicate that radiation monitoring records for members of the proposed class have been lost, falsified, or destroyed; or that there is no information regarding monitoring, source, source term, or process from the site where the employees worked.

(Attach documents and/or affidavits to the back of the petition form.)

Describe as completely as possible, to the extent it might be unclear, how the attached documentation and/or affidavit(s) indicate that radiation monitoring records for members of the proposed class have been lost, altered illegally, or destroyed.

Part F is continued on the following page

Name or Social Security Number of First Petitioner: _____

Continuation Page — Photocopy and complete as necessary.

DOE/EW/40017-T6

DEPARTMENT OF ENERGY REPORT DATED 04/30/1997 APOLLO DECOMMISIONING PROJECT APOLLO, PA. FINAL TECHNICAL REPORT.

THE DECONTAMINATION REPORT OF APOLLO STATES THAT THE APOLLO PLANT OFFICE BUILDING WAS NOT AN ORIGINAL PART OF THE APOLLO DECOMMISSIONING PROJECT. IT WAS INCLUDED AS PART OF THE PROJECT IN THE SPRING OF 1993 AFTER IT WAS DETERMINED THAT FLOOR BOARDS AND DRAIN LINES CONTAINED URANIUM LEVELS THAT EXCEEDED 30 PCI V/G.

I CAN RECALL IN THE YEARS 1962-63-64 WHEN I WORKED IN THE ACCOUNTING DEPARTMENT IN NUMEC. WHICH WAS ON THE SECOND FLOOR OF THE THREE STORY STRUCTURE, THAT THERE WAS A CHEMICAL TESTING LAB BELOW OUR LARGE OFFICE.

THE APOLLO OFFICE BUILDING AND PLANT AND ALSO THE NUMEC PARKS FACILITY ALL HAD TO BE CAREFULLY DEMOLISHED. OVER ONE MILLION CUBIC FEET OF CONTAMINATED DEBRIS AND SOIL CONTAINING >30 PCI V/G WAS LOADED AND TAKEN AWAY FOR CONTROLLED OFFSITE DISPOSAL.

NIOSH'S OWN RECORDS PRESENTLY SHOW THE HIGH RESIDUAL RADIOATIVE CONTAMINATION THAT EXISTED WHEN THESE NUMEC SITES WERE DEMOLISHED.

Attach to Form B if necessary.

Name or Social Security Number of First Petitioner: _____

DOE/EW/40017--T6

Final Technical Report

Apollo Decommissioning Project
Apollo Pennsylvania

(DOE Assistance Instrument Number DE-FG01-91EW40017)

MASTER

DISTRIBUTION OF THIS DOCUMENT IS UNLIMITED

Rev 0 | 4/30/97 | Prepared by B&W NESI

Before 1992, metallic materials (structural steel, conduit, piping, ventilation, etc.) resulting from the decommissioning and decommissioning support activities that did not meet the criteria for release for unrestricted use were sent to Chem-Nuclear for burial. After 1992, these materials were sent to Envirocare for burial.

A. Site Characterization

Between 1986 until 1992, samples were obtained using hand and mechanized borings (soil), wall scabbling (paint), floor scabbling (paint), core sampling (concrete), and groundwater monitoring wells (groundwater). The samples were analyzed for chemical and radiological constituents. The results of this site characterization are described below.

1. Site Description

The Apollo Site was separated into three areas for planning and controlling the site characterization and subsequent decommissioning activities: the Apollo Facility, Parking Lot, and Off-Site areas (Figure 1).

a. Apollo Facility

The Apollo Facility had one main bay, the East Bay, and three smaller attached bays known as the West Bay, the Box Shop, and the Annex. These buildings were located on B&W-owned property on the east side of the site. They were bordered on the north, south, and west by a Metals Processing Facility owned by a Third Party located in the Off-Site area. Manufacturing activities in the Apollo Facility included HEU conversion, HEU scrap recovery, LEU conversion, LEU scrap recovery, and other support activities (utilities, uranium storage, laboratories, offices, health physics, etc.).

b. Parking Lot

The Parking Lot was a 1.5 acre L-shaped area located on the south and east section of the Apollo Site. One acre was leased to B&W and a half acre was used by a neighboring industrial facility. The Parking Lot area was bounded by the Kiskiminetas River on the west, Warren Avenue on the east, and the Off-Site area on the north. The Parking Lot also contained the Laundry Building and the Small Block Building. The Laundry Building was used for washing protective clothing used at nuclear facilities and the Small Block Building was used for storage of processing equipment.

(3 to 4 pCiTc-99/g and 1 to 7 pCiEu-152/g), and transuranics (0.7 to 19 pCiTRU/g). Uranium concentration in the riverbank adjacent to the site ranged from 5 to 57 pCiU/g.

Although the uranium concentration on selective wall areas reached 2,000 pCiU/g, the majority of the Apollo Facility's walls were below 30 pCiU/g. The Apollo Facility's concrete floors had levels that exceed 2,000 pCiU/g in some areas. The Apollo Facility's roof had uranium concentrations varying from 11 to 5,600 pCiU/g. The Apollo Facility's concrete sump contained 3 to 160 pCiTc-99/g.

The groundwater beneath the Apollo Site was sampled and did not contain concentrations greater than 30pCiU/l. In the last 13 years, the Kiskiminetas River has been sampled at various areas along the Apollo Site. No sample exceeded 30 pCiU/l.

3. Chemical Characterization

Characterization activities focused on site soils and groundwater. Soil samples were analyzed for metals, reactive cyanide, reactive sulfide, and polychlorinated biphenyls (PCBs). Also, the soil was tested for volatile organic analytes (VOAs), polycyclic aromatic hydrocarbons (PAHs), and pesticides.

Some soil with contamination greater than 30pCiU/l contained low concentrations of heavy metals (chromium, cadmium, etc.) typical of levels found at western Pennsylvania steel mill sites. The soils did not fail the EPA's Toxic Characterization Leaching Procedure (TCLP), and none of the soils were classified as mixed waste.

Comprehensive groundwater sampling and analysis was performed to determine if chemicals were present in the groundwater. Compounds analyzed consisted of fluoride, dissolved metals, and volatile organics. Trichloroethylene (TCE) was found at elevated levels in two of the monitoring wells.

B. Building Demolition

Various building structures were decontaminated and demolished using standard methods before NRC approval of the Apollo Decommissioning Plan.

1. Apollo Facility

The HEU Processing Area located on the second floor of the East Bay underwent remediation from 1978 until July 1991. Initially, the process equipment was dismantled and sent to Chem-Nuclear. The second floor then was broken up and the rubble disposed of in a similar manner. Finally, all remaining equipment, ventilation systems, and other installations, such as piping and power lines from the area were dismantled and disposed

of at Envirocare.

The LEU Processing Area located in the East Bay was remediated between 1983 and 1984. During this period, the LEU processing equipment was removed, volume-reduced and disposed of as LLRW. By October 1984, all of the equipment had been removed and sent to Chem-Nuclear.

The Box Shop was a two-story, corrugated sheet metal building with concrete block walls and a concrete floor. It was adjacent to the south wall of the East Bay. In 1976, all the Box Shop processing equipment was removed. Starting in September, 1990, the Box Shop was demolished. The masonry portion of the Box Shop was broken up, palletized, covered with shrink-wrapped polyethylene, and temporarily stored in the Parking Lot until the Processing Plant was ready to accept materials. The floor slab was remediated during decommissioning.

The Annex was a corrugated sheet metal and concrete block building attached to the west wall of the East Bay. From July, 1990 until October, 1990, the Annex was demolished in the same manner as the Box Shop.

In early to mid 1992, the East Bay's architectural features (i.e., offices, laboratories, elevated mezzanines, etc.) were demolished. Also during this period, the West Bay and two small attached buildings (the Central Alarm Station/Visitor Area and the compressor building) were demolished. Concrete rubble was temporarily stored onsite in the Parking Lot for eventual crushing by the Processing Plant. The crushed concrete rubble exceeding the release criteria was sent to an appropriate LLRW disposal facility.

At the initiation of the Apollo Decommissioning Project in June, 1992, the East Bay shell, consisting of four walls, a roof, and a concrete floor slab, and the floor slabs of the Annex and the Box Shop remained to be remediated.

2. Parking Lot Buildings

The Laundry Building located in the southwest corner of the Parking Lot was a single story, corrugated sheet metal and steel structure with an adjoining concrete block wing. It was remediated between 1984 and 1991. In 1984, processing equipment, nonessential utilities, and miscellaneous support systems were volume reduced, packaged and sent to Chem-Nuclear. The Laundry Building's concrete trench that served as a sump drain for washing machine waste water was removed in April 1989. The corrugated sheet metal, roofing, and structural steel was dismantled and radiologically surveyed. The steel was determined to meet the NRC's release for unrestricted use criteria and was disposed of as scrap. The concrete block walls were demolished in August 1991, covered, and temporarily stored in the Parking Lot until the Processing Plant was ready to accept

materials.

The Small Block Building was a single-story, corrugated sheet metal and concrete block structure located in the northeast portion of the Parking Lot. The Small Block Building was demolished between January and February of 1991. The debris, palletized concrete block and drummed wall rubble, was covered and stored in the Parking Lot until the Processing Plant was ready to accept materials. The sheet metal was radiologically surveyed, determined to meet the NRC's release for unrestricted use criteria, and disposed of as scrap. The floor slab was covered for remediation during decommissioning.

C. Removal of Offsite Soil and High Activity Under-Building Soil

Selective soil remediation was performed using standard excavating equipment before the NRC approval of the Apollo Decommissioning Plan.

1. Alcove

The Alcove was a small strip of ground north of the Apollo Site, owned by the neighboring industrial facility. Between March, 1988 and May, 1989, soil was excavated, transported to the B&W property, covered, and stored in the Parking Lot for dispositioning during decommissioning. Soil excavation ceased at the point that sampling confirmed uranium concentrations at all locations were below the NRC's criteria for release for unrestricted use of 30 pCiU/g. The results of the B&W radiological survey of the alcove were confirmed by the NRC and the area was backfilled with clean fill.

2. South Bay Area

The South Bay Area was located on the southern end of the Metals Processing Facility's property. Soil was removed from the south bay area until the remaining activity was below 30 pCiU/g. The soil also was stored and covered in the Parking Lot for disposition during decommissioning. The results of the final survey of the area were verified by the NRC and the South Bay Area was backfilled with clean fill.

3. Apollo Facility Area

Between 1991 and 1992, interior portions of the Apollo Facility's concrete floor slab and underlying soil containing activity greater than 2,000 pCiU/g were removed, packaged in metal boxes, and shipped to Chem-Nuclear.

particles. The air was exhausted through a HEPA filter to minimize any airborne emissions. Building rubble was sent to the Processing Plant where it was reduced in size, sampled, analyzed, and either released for unrestricted use as backfill on the site or sent to Envirocare. By the end of 1992, the demolition of the East Bay shell was complete.

b. Apollo Office Building

The Apollo Office Building was located directly across Warren Avenue, east of the Apollo Facility. It was used as an administrative, engineering, and support office for management and professional staff. During the late 1960s and early 1970s, it contained an analytical laboratory that was used to analyze radioactive and non-radioactive products. A small portion of the building basement also housed operations which manufactured instruments used in the production of nuclear fuels. Although the Apollo Office Building was not an original part of the Apollo Decommissioning Project, it was included as part of the Project in the Spring of 1993 after it was determined that some floor boards and some drain lines contained uranium levels that exceeded 30 pCiU/g. The affected drain lines and floor boards were removed and sent to Envirocare and the building was demolished under controlled conditions. Following B&W's survey of the property and the NRC's confirmatory survey, the area was backfilled, graded and revegetated. The property subsequently was sold to an adjacent business in July of 1996.

c. Metals Processing Facility

The Metals Processing Facility (never owned or operated by NUMEC or B&W) located in the Off-Site area per Figure 1 was not included in the Apollo Decommissioning Project, but significant activities occurred there during the 1992-1995 period. The owner of the facility demolished the 23 production buildings and the one office building. This demolition allowed greater access to the sewers located in the Off-Site area that required radiological remediation.

3. Soil and Building Concrete

The site characterization results defined the depth and extent of radiological constituents in the soil and building concrete that exceeded the NRC's release for unrestricted use criteria. Eight major areas were designated for soil remediation (Figure 2). Concrete stored in the Parking Lot and concrete from the foundations of the Apollo Facility and Small Block Building were also designated for remediation. Excavated soil and building concrete was sent through the Processing Plant and either released for unrestricted use or loaded into rail cars and shipped to Envirocare (Any soil or concrete rubble exceeding 2,000 pCiU/g was disposed of at Chem-Nuclear during decommissioning support activities).

Special Exposure Cohort Petition
under the Energy Employees Occupational Illness Compensation Act

U.S. Department of Health and Human Services
Centers for Disease Control and Prevention
National Institute for Occupational Safety and Health

Special Exposure Cohort Petition — Form B

OMB Number: 0920-0639 Expires: 05/31/2007
Appendix — Continuation Page

Continuation Page — Photocopy and complete as necessary.

ISRAEL'S NUCLEAR WEAPONS
THE THIRD TEMPLES HOLY OF HOLIES BY WARNER D. FARR

FOUND ON THE FOLLOWING WEBSITES
① WWW:AV.AF.MIL/AU/AWC/AWCGATE/AWC-CPS.HTM
② HTTP:FAS.ORG/NUKE/GUIDE/ISRAEL/NUKE/FARR.HTM

THE ARTICLE SAYS THAT "100 KILOS OF PLUTONIUM THAT WAS MISSING SINCE THE 1960'S WAS FOUND IN THE 1990'S WITHIN THE STRUCTURAL COMPONENTS OF THE CONTAMINATED PLANT WHEN IT WAS DECOMMISSIONED BY THE NUCLEAR REGULATORY COMMISSION"

THE ARTICLE NAMES NUMEC AS THE CONTAMINATED PLANT. TO ME STRUCTURAL COMPONENTS MEAN FLOOR BOARDS, DRAINS, WALLS, VENTILATION SYSTEM, ETC.

UNITED STATES AIR FORCE COUNTER PROLIFERATION CENTER
325 CHENNAULP CIRCLE
MAXWELL AF BASE, AL 36112-6427

I, RECALL THAT GOVERNMENT AGENTS WERE INVESTIGATING MISSING RADIOACTIVE MATERIAL WHEN I WORKED AT THE NUMEC OFFICE BUILDING IN 1964

Attach to Form B if necessary

Name or Social Security Number of First Petitioner:

Index

THE THIRD TEMPLE'S HOLY OF HOLIES: ISRAEL'S NUCLEAR WEAPONS

Warner D. Farr, LTC, U.S. Army

The Counterproliferation Papers

Future Warfare Series No. 2

USAF Counterproliferation Center

Air War College

Air University

Maxwell Air Force Base, Alabama

September 1999

SEE PAGE 11

The Counterproliferation Papers Series was established by the USAF Counterproliferation Center to provide information and analysis to U.S. national security policy-makers and USAF officers to assist them in countering the threat posed by adversaries equipped with weapons of mass destruction. Copies of papers in this series are available from the USAF Counterproliferation Center, 325 Chennault Circle, Maxwell AFB AL 36112-6427. The fax number is (334) 953-7538; phone (334) 953-7538.

Counterproliferation Paper No. 2
USAF Counterproliferation Center
Air War College

Air University
Maxwell Air Force Base, Alabama 36112-6427

The internet address for the USAF Counterproliferation Center is:

http://www.au.af.mil/au/awc/awcgate/awc-cps.htm

Contents:

Page

Disclaimer i

The Author ii

Acknowledgments iii

Abstract iv

I. Introduction 1

II. 1948-1962: With French Cooperation 3

III. 1963-1973: Seeing the Project Through to Completion 9

IV. 1974-1999: Bringing the Bomb Up the Basement Stairs 15

Appendix: Estimates of the Israeli Nuclear Arsenal 23

Notes 25

Disclaimer

The views expressed in this publication are those solely of the author and are not a statement of official policy or position of the U.S. Government, the Department of Defense, the U.S. Army, or the USAF Counterproliferation Center.

The Author

Colonel Warner D. "Rocky" Farr, Medical Corps, Master Flight Surgeon, U.S. Army, graduated from the Air War College at Maxwell Air Force Base, Alabama before becoming the Command Surgeon, U.S. Army Special Operations Command at Fort Bragg, North Carolina. He also serves as the Surgeon for the U.S. Army Special Forces Command, U.S. Army Civil Affairs and

Psychological Operations Command, and the U.S. Army John F. Kennedy Special Warfare Center and School. With thirty-three years of military service, he holds an Associate of Arts from the State University of New York, Bachelor of Science from Northeast Louisiana University, Doctor of Medicine from the Uniformed Services University of the Health Sciences, Masters of Public Health from the University of Texas, and has completed medical residencies in aerospace medicine, and anatomic and clinical pathology. He is the only army officer to be board certified in these three specialties. Solo qualified in the TH-55A Army helicopter, he received flight training in the T-37 and T-38 aircraft as part of his USAF School of Aerospace Medicine residency.

Colonel Farr was a Master Sergeant Special Forces medic prior to receiving a direct commission to second lieutenant. He is now the senior Special Forces medical officer in the U.S. Army with prior assignments in the 5th, 7th, and 10th Special Forces Groups (Airborne), 1st Special Forces, in Vietnam, the United States, and Germany. He has advised the 12th and 20th Special Forces Groups (Airborne) in the reserves and national guard, served as Division Surgeon, 10th Mountain Division (Light Infantry), and as the Deputy Commander of the U.S. Army Aeromedical Center, Fort Rucker, Alabama.

Acknowledgments

I would like to acknowledge the assistance, guidance and encouragement from my Air War College (AWC) faculty research advisor, Dr. Andrew Terrill, instructor of the Air War College Arab-Israeli Wars course. Thanks are also due to the great aid of the Air University librarians. The author is also indebted to Captain J. R. Saunders, USN and Colonel Robert Sutton, USAF. Who also offered helpful suggestions.

Abstract

This paper is a history of the Israeli nuclear weapons program drawn from a review of unclassified sources. Israel began its search for nuclear weapons at the inception of the state in 1948. As payment

for Israeli participation in the Suez Crisis of 1956, France provided nuclear expertise and constructed a reactor complex for Israel at Dimona capable of large-scale plutonium production and reprocessing. The United States discovered the facility by 1958 and it was a subject of continual discussions between American presidents and Israeli prime ministers. Israel used delay and deception to at first keep the United States at bay, and later used the nuclear option as a bargaining chip for a consistent American conventional arms supply. After French disengagement in the early 1960s, Israel progressed on its own, including through several covert operations, to project completion. Before the 1967 Six-Day War, they felt their nuclear facility threatened and reportedly assembled several nuclear devices. By the 1973 Yom Kippur War Israel had a number of sophisticated nuclear bombs, deployed them, and considered using them. The Arabs may have limited their war aims because of their knowledge of the Israeli nuclear weapons. Israel has most probably conducted several nuclear bomb tests. They have continued to modernize and vertically proliferate and are now one of the world's larger nuclear powers. Using "bomb in the basement" nuclear opacity, Israel has been able to use its arsenal as a deterrent to the Arab world while not technically violating American nonproliferation requirements.

The Third Temple's Holy of Holies: Israel's Nuclear Weapons

Warner D. Farr

I. Introduction

This is the end of the Third Temple.

- Attributed to Moshe Dayan

during the Yom Kippur War[1]

As Zionists in Palestine watched World War II from their distant sideshow, what lessons were learned? The soldiers of the Empire of

Japan vowed on their emperor's sacred throne to fight to the death and not face the inevitability of an American victory. Many Jews wondered if the Arabs would try to push them into the Mediterranean Sea. After the devastating American nuclear attack on Japan, the soldier leaders of the empire reevaluated their fight to the death position. Did the bomb give the Japanese permission to surrender and live? It obviously played a military role, a political role, and a peacemaking role. How close was the mindset of the Samurai culture to the Islamic culture? Did David Ben-Gurion take note and wonder if the same would work for Israel?[2] Could Israel find the ultimate deterrent that would convince her opponents that they could never, ever succeed? Was Israel's ability to cause a modern holocaust the best way to guarantee never having another one?

The use of unconventional weapons in the Middle East is not new. The British had used chemical artillery shells against the Turks at the second battle of Gaza in 1917. They continued chemical shelling against the Shiites in Iraq in 1920 and used aerial chemicals in the 1920s and 1930s in Iraq.[3]

Israel's involvement with nuclear technology starts at the founding of the state in 1948. Many talented Jewish scientists immigrated to Palestine during the thirties and forties, in particular, Ernst David Bergmann. He would become the director of the Israeli Atomic Energy Commission and the founder of Israel's efforts to develop nuclear weapons. Bergmann, a close friend and advisor of Israel's first Prime Minister, David Ben-Gurion, counseled that nuclear energy could compensate for Israel's poor natural resources and small pool of military manpower. He pointed out that there was just one nuclear energy, not two, suggesting nuclear weapons were part of the plan.[4] As early as 1948, Israeli scientists actively explored the Negev Desert for uranium deposits on orders from the Israeli Ministry of Defense. By 1950, they found low-grade deposits near Beersheba and Sidon and worked on a low power method of heavy water production.[5]

The newly created Weizmann Institute of Science actively supported nuclear research by 1949, with Dr. Bergmann heading the chemistry

division. Promising students went overseas to study nuclear engineering and physics at Israeli government expense. Israel secretly founded its own Atomic Energy Commission in 1952 and placed it under the control of the Defense Ministry.[6] The foundations of a nuclear program were beginning to develop.

II. 1948-1962: With French Cooperation

It has always been our intention to develop a nuclear potential.

- Ephraim Katzir[7]

In 1949, Francis Perrin, a member of the French Atomic Energy Commission, nuclear physicist, and friend of Dr. Bergmann visited the Weizmann Institute. He invited Israeli scientists to the new French nuclear research facility at Saclay. A joint research effort was subsequently set up between the two nations. Perrin publicly stated in 1986 that French scientists working in America on the Manhattan Project and in Canada during World War II were told they could use their knowledge in France provided they kept it a secret.[8] Perrin reportedly provided nuclear data to Israel on the same basis.[9] One Israeli scientist worked at the U.S. Los Alamos National Laboratory and may have directly brought expertise home. [10]

After the Second World War, France's nuclear research capability was quite limited. France had been a leading research center in nuclear physics before World War II, but had fallen far behind the U.S., the U.S.S.R., the United Kingdom, and even Canada. Israel and France were at a similar level of expertise after the war, and Israeli scientists could make significant contributions to the French effort. Progress in nuclear science and technology in France and Israel remained closely linked throughout the early fifties. Israeli scientists probably helped construct the G-1 plutonium production reactor and UP-1 reprocessing plant at Marcoule.[11] France profited from two Israeli patents on heavy water production and low-grade uranium enrichment.[12] In the 1950s and into the early 1960s, France and Israel had close relations in many areas. France was Israel's principal arms supplier, and as instability spread through

French colonies in North Africa, Israel provided valuable intelligence obtained from contacts with sephardic Jews in those countries.

The two nations collaborated, with the United Kingdom, in planning and staging the Suez Canal-Sinai operation against Egypt in October 1956. The Suez Crisis became the real genesis of Israel's nuclear weapons production program. With the Czech-Egyptian arms agreement in 1955, Israel became worried. When absorbed, the Soviet-bloc equipment would triple Egyptian military strength. After Egypt's President Nasser closed the Straits of Tiran in 1953, Israeli Prime Minister Ben-Gurion ordered the development of chemical munitions and other unconventional munitions, including nuclear.[13] Six weeks before the Suez Canal operation, Israel felt the time was right to approach France for assistance in building a nuclear reactor. Canada had set a precedent a year earlier when it had agreed to build a 40-megawatt CIRUS reactor in India. Shimon Peres, the Director-General of the Defense Ministry and aide to Prime Minister (and Defense Minister) David Ben-Gurion, and Bergmann met with members of the CEA (France's Atomic Energy Commission). During September 1956, they reached an initial understanding to provide a research reactor. The two countries concluded final agreements at a secret meeting outside Paris where they also finalized details of the Suez Canal operation.[14]

For the United Kingdom and France, the Suez operation, launched on October 29, 1956, was a total disaster. Israel's part was a military success, allowing it to occupy the entire Sinai Peninsula by 4 November, but the French and British canal invasion on 6 November was a political failure. Their attempt to advance south along the Suez Canal stopped due to a cease-fire under fierce Soviet and U.S. pressure. Both nations pulled out, leaving Israel to face the pressure from the two superpowers alone. Soviet Premier Bulganin and President Khrushchev issued an implicit threat of nuclear attack if Israel did not withdraw from the Sinai.

On 7 November 1956, a secret meeting was held between Israeli foreign minister Golda Meir, Shimon Peres, and French foreign and defense ministers Christian Pineau and Maurice Bourges-Manoury.

The French, embarrassed by their failure to support their ally in the operation, found the Israelis deeply concerned about a Soviet threat. In this meeting, they substantially modified the initial understanding beyond a research reactor. Peres secured an agreement from France to assist Israel in developing a nuclear deterrent. After further months of negotiation, agreement was reached for an 18-megawatt (thermal) research reactor of the EL-3 type, along with plutonium separation technology. France and Israel signed the agreement in October 1957.[15] Later the reactor was officially upgraded to 24 megawatts, but the actual specifications issued to engineers provided for core cooling ducts sufficient for up to three times this power level, along with a plutonium plant of similar capacity. Data from insider reports revealed in 1986 would estimate the power level at 125-150 megawatts.[16] The reactor, not connected to turbines for power production, needed this increase in size only to increase its plutonium production. How this upgrade came about remains unknown, but Bourges-Maunoury, replacing Mollet as French prime minister, may have contributed to it.[17] Shimon Peres, the guiding hand in the Israeli nuclear program, had a close relationship with Bourges-Maunoury and probably helped him politically.[18]

Why was France so eager to help Israel? DeMollet and then de Gaulle had a place for Israel within their strategic vision. A nuclear Israel could be a counterforce against Egypt in France's fight in Algeria. Egypt was openly aiding the rebel forces there. France also wanted to obtain the bomb itself. The United States had embargoed certain nuclear enabling computer technology from France. Israel could get the technology from America and pass it through to France. The U.S. furnished Israel heavy water, under the Atoms for Peace program, for the small research reactor at Soreq. France could use this heavy water. Since France was some years away from nuclear testing and success, Israeli science was an insurance policy in case of technical problems in France's own program.[19] The Israeli intelligence community's knowledge of past French (especially Vichy) anti-Semitic transgressions and the continued presence of former Nazi collaborators in French intelligence provided the Israelis with some blackmail opportunities.[20] The cooperation was so close that Israel worked with France on the

preproduction design of early Mirage jet aircraft, designed to be capable of delivering nuclear bombs.[21]

French experts secretly built the Israeli reactor underground at Dimona, in the Negev desert of southern Israel near Beersheba. Hundreds of French engineers and technicians filled Beersheba, the biggest town in the Negev. Many of the same contractors who built Marcoule were involved. SON (a French firm) built the plutonium separation plants in both France and Israel. The ground was broken for the EL-102 reactor (as it was known to France) in early 1958.

Israel used many subterfuges to conceal activity at Dimona. It called the plant a manganese plant, and rarely, a textile plant. The United States by the end of 1958 had taken pictures of the project from U-2 spy planes, and identified the site as a probable reactor complex. The concentration of Frenchmen was also impossible to hide from ground observers. In 1960, before the reactor was operating, France, now under the leadership of de Gaulle, reconsidered and decided to suspend the project. After several months of negotiation, they reached an agreement in November that allowed the reactor to proceed if Israel promised not to make nuclear weapons and to announce the project to the world. Work on the plutonium reprocessing plant halted. On 2 December 1960, before Israel could make announcements, the U.S. State Department issued a statement that Israel had a secret nuclear installation. By 16 December, this became public knowledge with its appearance in the *New York Times*. On 21 December, Ben-Gurion announced that Israel was building a 24-megawatt reactor "for peaceful purposes."[22]

Over the next year, relations between the U.S. and Israel became strained over the Dimona reactor. The U.S. accepted Israel's assertions at face value publicly, but exerted pressure privately. Although Israel allowed a cursory inspection by well known American physicists Eugene Wigner and I. I. Rabi, Prime Minister Ben-Gurion consistently refused to allow regular international inspections. The final resolution between the U.S. and Israel was a commitment from Israel to use the facility for peaceful purposes, and to admit an U.S. inspection team twice a year. These inspections began in 1962 and continued until 1969. Inspectors saw only the

above ground part of the buildings, not the many levels underground and the visit frequency was never more than once a year. The above ground areas had simulated control rooms, and access to the underground areas was kept hidden while the inspectors were present. Elevators leading to the secret underground plutonium reprocessing plant were actually bricked over.[23] Much of the information on these inspections and the political maneuvering around it has just been declassified.[24]

One interpretation of Ben-Gurion's "peaceful purposes" pledge given to America is that he interpreted it to mean that nuclear weapon development was not excluded if used strictly for defensive, and not offensive purposes. Israel's security position in the late fifties and early sixties was far more precarious than now. After three wars, with a robust domestic arms industry and a reliable defense supply line from the U.S., Israel felt much more secure. During the fifties and early sixties a number of attempts by Israel to obtain security guarantees from the U.S. to place Israel under the U.S. nuclear umbrella like NATO or Japan, were unsuccessful. If the U.S. had conducted a forward-looking policy to restrain Israel's proliferation, along with a sure defense agreement, we could have prevented the development of Israel's nuclear arsenal.

One common discussion in the literature concerns testing of Israeli nuclear devices. In the early phases, the amount of collaboration between the French and Israeli nuclear weapons design programs made testing unnecessary. In addition, although their main efforts were with plutonium, the Israelis may have amassed enough uranium for gun-assembled type bombs which, like the Hiroshima bomb, require no testing. One expert postulated, based on unnamed sources, that the French nuclear test in 1960 made two nuclear powers not one—such was the depth of collaboration.]25] There were several Israeli observers at the French nuclear tests and the Israelis had "unrestricted access to French nuclear test explosion data."[26] Israel also supplied essential technology and hardware. [27] The French reportedly shipped reprocessed plutonium back to Israel as part of their repayment for Israeli scientific help.

However, this constant, decade long, French cooperation and support

was soon to end and Israel would have to go it alone.

III. 1963-1973: Seeing the Project to Completion

To act in such a way that the Jews who died in the gas chambers would be the last Jews to die without defending themselves.

- Golda Meir[28]

Israel would soon need its own, independent, capabilities to complete its nuclear program. Only five countries had facilities for uranium enrichment: the United States, the Soviet Union, the United Kingdom, France, and China. The Nuclear Materials and Equipment Corporation, or NUMEC, in Apollo, Pennsylvania was a small fuel rod fabrication plant. In 1965, the U.S. government accused Dr. Zalman Shapiro, the corporation president, of "losing" 200 pounds of highly enriched uranium. Although investigated by the Atomic Energy Commission, the Central Intelligence Agency, the Federal Bureau of Investigation, and other government agencies and inquiring reporters, no answers were available in what was termed the Apollo Affair.[29] Many remain convinced that the Israelis received 200 pounds of enriched uranium sometime before 1965.[30] One source links Rafi Eitan, an Israeli Mossad agent and later the handler of spy Jonathan Pollard, with NUMEC.[31] In the 1990s when the NUMEC plant was disassembled, the Nuclear Regulatory Commission found over 100 kilograms of plutonium in the structural components of the contaminated plant, casting doubt on 200 pounds going to Israel.[32]

The joint venture with France gave Israel several ingredients for nuclear weapons construction: a production reactor, a factory to extract plutonium from the spent fuel, and the design. In 1962, the Dimona reactor went critical; the French resumed work on the underground plutonium reprocessing plant, and completed it in 1964 or 1965. The acquisition of this reactor and related technologies was clearly intended for military purposes from the outset (not "dual-use"), as the reactor has no other function. The security at Dimona (officially the Negev Nuclear Research Center) was particularly stringent. For straying into Dimona's airspace, the Israelis shot down

one of their own Mirage fighters during the Six-Day War. The Israelis also shot down a Libyan airliner with 104 passengers, in 1973, which had strayed over the Sinai.[33] There is little doubt that some time in the late sixties Israel became the sixth nation to manufacture nuclear weapons. Other things they needed were extra uranium and extra heavy water to run the reactor at a higher rate. Norway, France, and the United States provided the heavy water and "Operation Plumbat" provided the uranium.

After the 1967 war, France stopped supplies of uranium to Israel. These supplies were from former French colonies of Gabon, Niger, and the Central Africa Republic.[34] Israel had small amounts of uranium from Negev phosphate mines and had bought some from Argentina and South Africa, but not in the large quantities supplied by the French. Through a complicated undercover operation, the Israelis obtained uranium oxide, known as yellow cake, held in a stockpile in Antwerp. Using a West German front company and a high seas transfer from one ship to another in the Mediterranean, they obtained 200 tons of yellow cake. The smugglers labeled the 560 sealed oil drums "Plumbat," which means lead, hence "Operation Plumbat."[35] The West German government may have been involved directly but remained undercover to avoid antagonizing the Soviets or Arabs.[36] Israeli intelligence information on the Nazi past of some West German officials may have provided the motivation.[37]

Norway sold 20 tons of heavy water to Israel in 1959 for use in an experimental power reactor. Norway insisted on the right to inspect the heavy water for 32 years, but did so only once, in April 1961, while it was still in storage barrels at Dimona. Israel simply promised that the heavy water was for peaceful purposes. In addition, quantities much more than what would be required for the peaceful purpose reactors were imported. Norway either colluded or at the least was very slow to ask to inspect as the International Atomic Energy Agency (IAEA) rules required.[38] Norway and Israel concluded an agreement in 1990 for Israel to sell back 10.5 tons of the heavy water to Norway. Recent calculations reveal that Israel has used two tons and will retain eight tons more.[39]

Author Seymour Hersh, writing in the *Samson Option* says Prime Minister Levi Eshkol delayed starting weapons production even after Dimona was finished.[40] The reactor operated and the plutonium collected, but remained unseparated. The first extraction of plutonium probably occurred in late 1965. By 1966, enough plutonium was on hand to develop a weapon in time for the Six-Day War in 1967. Some type of non-nuclear test, perhaps a zero yield or implosion test, occurred on November 2, 1966. After this time, considerable collaboration between Israel and South Africa developed and continued through the 1970s and 1980s. South Africa became Israel's primary supplier of uranium for Dimona. A Center for Nonproliferation Studies report lists four separate Israel-South Africa "clandestine nuclear deals." Three concerned yellowcake and one was tritium.[41] Other sources of yellowcake may have included Portugal.[42]

Egypt attempted unsuccessfully to obtain nuclear weapons from the Soviet Union both before and after the Six-Day War. President Nasser received from the Soviet Union a questionable nuclear guarantee instead and declared that Egypt would develop its own nuclear program.[43] His rhetoric of 1965 and 1966 about preventive war and Israeli nuclear weapons coupled with overflights of the Dimona rector contributed to the tensions that led to war. The Egyptian Air Force claims to have first overflown Dimona and recognized the existence of a nuclear reactor in 1965.[44] Of the 50 American HAWK antiaircraft missiles in Israeli hands, half ringed Dimona by 1965.[45] Israel considered the Egyptian overflights of May 16, 1967 as possible pre-strike reconnaissance. One source lists such Egyptian overflights, along with United Nations peacekeeper withdrawal and Egyptian troop movements into the Sinai, as one of the three "tripwires" which would drive Israel to war.[46] There was an Egyptian military plan to attack Dimona at the start of any war but Nasser vetoed it.[47] He believed Israel would have the bomb in 1968.[48] Israel assembled two nuclear bombs and ten days later went to war.[49] Nasser's plan, if he had one, may have been to gain and consolidate territorial gains before Israel had a nuclear option.[50] He was two weeks too late.

threatened, on 24 October, to airlift Soviet airborne troops to reinforce the Egyptians cut off on the eastern side of the Suez Canal and put seven Soviet airborne divisions on alert.[69] Recent evidence indicates that the Soviets sent nuclear missile submarines also.[70] *Aviation Week and Space Technology* magazine claimed that the two Soviet SCUD brigades deployed in Egypt each had a nuclear warhead. American satellite photos seemed to confirm this. The U.S. passed to Israel images of trucks, of the type used to transport nuclear warheads, parked near the launchers.[71] President Nixon's response was to bring the U.S. to worldwide nuclear alert the next day, whereupon Israel went to nuclear alert a third time.[72] This sudden crisis quickly faded as Prime Minister Meir agreed to a cease-fire, relieving the pressure on the Egyptian Third Army.

Inspection visits had agreed to in 1966 were not allowed. The State Department tried to link the aircraft purchases to continued inspection visits. President Johnson warned the Israelis that the United States would not be used to deliver nuclear weapons. The State Department tried to deter the Arabs from attacking Dimona in retaliation.[52] Although in 1967 the time, America delivered the F-4Es, and Israel's bomb, with nuclear capable bombers, was ready.[53]

The Samson Option states that Moshe Dayan gave the go-ahead for starting weapon production in early 1968, putting the plutonium separation plant into full operation. Israel began producing three to five bombs a year. The book *Critical Mass* asserts that Israel had two bombs in 1967, and that Prime Minister Eshkol ordered them armed in Israel's first nuclear alert during the Six-Day War.[54] Avner Cohen in his recent book *Israel and the Bomb*, agrees that Israel had a deliverable nuclear capability in the 1967 war. He quotes Munya Mardor, leader of Rafael, the Armament Development Authority, and other unnamed sources, that Israel "cobbled together" two deliverable devices.[55]

At the end of the Yom Kippur War (a nation shaking experience), Israel has her nuclear arsenal fully functional and tested by a deployment. The arsenal, still opaque and unspoken, was no longer a secret, especially to the two superpowers, the United States and the Soviet Union.

IV. 1974-1999: Bringing the Bomb up the Basement Stairs

Never Again!

In 1971, Israel began purchasing krytrons, ultra high-speed electronic switching tubes that are "dual-use," having both industrial and nuclear weapons applications as detonators. In the 1980s, the United States charged an American, Richard Smith (or Smyth), with

smuggling 810 krytrons to Israel.[57] He vanished before trial and reportedly lives outside Tel Aviv. The Israelis apologized for the action saying that the krytrons were for medical research.[58] Israel returned 469 of the krytrons but the rest, they declared, had been destroyed in testing conventional weapons. Some believe they went to South Africa.[59] Smyth has also been reported to have been involved in a 1972 smuggling operation to obtain solid rocket fuel binder compounds for the Jericho II missile and guidance component hardware.[60] Observers point to the Jericho missile itself as proof of a nuclear capability as it is not suited to the delivery of conventional munitions.[61]

On the afternoon of 6 October 1973, Egypt and Syria attacked Israel in a coordinated surprise attack, beginning the Yom Kippur War. Caught with only regular forces on duty, augmented by reservists with a low readiness level, Israeli front lines crumbled. By early afternoon on 7 October, no effective forces were in the southern Golan Heights and Syrian forces had reached the edge of the plateau, overlooking the Jordan River. This crisis brought Israel to its second nuclear alert.

Defense Minister Moshe Dayan, obviously not at his best at a press briefing, was, according to *Time* magazine, rattled enough to later tell the prime minister that "this is the end of the third temple," referring to an impending collapse of the state of Israel. "Temple" was also the code word for nuclear weapons. Prime Minister Golda Meir and her "kitchen cabinet" made the decision on the night of 8 October. The Israelis assembled 13 twenty-kiloton atomic bombs. The number and in fact the entire story was later leaked by the Israelis as a great psychological warfare tool. Although most probably plutonium devices, one source reports they were enriched uranium bombs. The Jericho missiles at Hirbat Zachariah and the nuclear strike F-4s at Tel Nof were armed and prepared for action against Syrian and Egyptian targets. They also targeted Damascus with nuclear capable long-range artillery although it is not certain they had nuclear artillery shells.[62]

U.S. Secretary of State Henry Kissinger was notified of the alert several hours later on the morning of 9 October. The U.S. decided to

open an aerial resupply pipeline to Israel, and Israeli aircraft began picking up supplies that day. Although stockpile depletion remained a concern, the military situation stabilized on October 8th and 9th as Israeli reserves poured into the battle and averted disaster. Well before significant American resupply had reached Israeli forces, the Israelis counterattacked and turned the tide on both fronts.

On 11 October, a counterattack on the Golan broke the back of Syria's offensive, and on 15 and 16 October, Israel launched a surprise crossing of the Suez Canal into Africa. Soon the Israelis encircled the Egyptian Third Army and it was faced with annihilation on the east bank of the Suez Canal, with no protective forces remaining between the Israeli Army and Cairo. The first U.S. flights arrived on 14 October.[63] Israeli commandos flew to Fort Benning, Georgia to train with the new American TOW anti-tank missiles and return with a C-130 Hercules aircraft full of them in time for the decisive Golan battle. American commanders in Germany depleted their stocks of missiles, at that time only shared with the British and West Germans, and sent them forward to Israel. [64]

Thus started the subtle, opaque use of the Israeli bomb to ensure that the United States kept its pledge to maintain Israel's conventional weapons edge over its foes.[65] There is significant anecdotal evidence that Henry Kissinger told President of Egypt, Anwar Sadat, that the reason for the U.S. airlift was that the Israelis were close to "going nuclear."[66]

A similar Soviet pipeline to the Arabs, equally robust, may or may not have included a ship with nuclear weapons on it, detected from nuclear trace emissions and shadowed by the Americans from the Dardanelles. The Israelis believe that the Soviets discovered Israeli nuclear preparations from COSMOS satellite photographs and decided to equalize the odds.[67] The Soviet ship arrived in Alexandria on either 18 or 23 October (sources disagree), and remained, without unloading, until November 1973. The ship may have represented a Soviet guarantee to the Arab combatants to neutralize the Israeli nuclear option.[68] While some others dismiss the story completely, the best-written review article concludes that

the answer is "obscure." Soviet premier Leonid Brezhnev

- Reportedly welded on the first Israeli nuclear bomb[77]

Shortly after the 1973 war, Israel allegedly fielded considerable nuclear artillery consisting of American 175 mm and 203 mm self-propelled artillery pieces, capable of firing nuclear shells. If true, this shows that Dimona had rapidly solved the problems of designing smaller weapons since the crude 1967 devices. If true, these low yield, tactical nuclear artillery rounds could reach at least 25 miles. The Israeli Defense Force did have three battalions of the 175mm artillery (36 tubes), reportedly with 108 nuclear shells and more for the 203mm tubes. Some sources describe a program to extend the range to 45 miles. They may have offered the South Africans these low yield, miniaturized, shells described as, "the best stuff we got."[78] By 1976, according to one unclassified source, the Central Intelligence Agency believed that the Israelis were using plutonium from Dimona and had 10 to 20 nuclear weapons available.[79]

In 1972, two Israeli scientists, Isaiah Nebenzahl and Menacehm Levin, developed a cheaper, faster uranium enrichment process. It used a laser beam for isotope separation. It could reportedly enrich seven grams of Uranium 235 sixty percent in one day.[80] Sources later reported that Israel was using both centrifuges and lasers to enrich uranium.[81]

Questions remained regarding full-scale nuclear weapons tests. Primitive gun assembled type devices need no testing. Researchers can test non-nuclear components of other types separately and use extensive computer simulations. Israel received data from the 1960 French tests, and one source concludes that Israel accessed information from U.S. tests conducted in the 1950s and early 1960s. This may have included both boosted and thermonuclear weapons data.[82] Underground testing in a hollowed out cavern is difficult to detect. A West Germany Army Magazine, *Wehrtechnik*, in June 1976, claimed that Western reports documented a 1963 underground test in the Negev. Other reports show a test at Al-Naqab, Negev in October 1966.[83]

A bright flash in the south Indian Ocean, observed by an American

satellite on 22 September 1979, is widely believed to be a South Africa-Israel joint nuclear test. It was, according to some, the third test of a neutron bomb. The first two were hidden in clouds to fool the satellite and the third was an accident—the weather cleared.[84] Experts differ on these possible tests. Several writers report that the scientists at Los Alamos National Laboratory believed it to have been a nuclear explosion while a presidential panel decided otherwise.[85] President Carter was just entering the Iran hostage nightmare and may have easily decided not to alter 30 years of looking the other way.[86] The explosion was almost certainly an Israeli bomb, tested at the invitation of the South Africans. It was more advanced than the "gun type" bombs developed by the South Africans.[87] One report claims it was a test of a nuclear artillery shell.[88] A 1997 Israeli newspaper quoted South African deputy foreign minister, Aziz Pahad, as confirming it was an Israeli test with South African logistical support.[89]

Controversy over possible nuclear testing continues to this day. In June 1998, a Member of the Knesset accused the government of an underground test near Eilat on May 28, 1998. Egyptian "nuclear experts" had made similar charges. The Israeli government hotly denied the claims.[90]

Not only were the Israelis interested in American nuclear weapons development data, they were interested in targeting data from U.S. intelligence. Israel discovered that they were on the Soviet target list. American-born Israeli spy Jonathan Pollard obtained satellite-imaging data of the Soviet Union, allowing Israel to target accurately Soviet cities. This showed Israel's intention to use its nuclear arsenal as a deterrent political lever, or retaliatory capability against the Soviet Union itself. Israel also used American satellite imagery to plan the 7 June 1981 attack on the Tammuz-1 reactor at Osiraq, Iraq. This daring attack, carried out by eight F-16s accompanied by six F-15s punched a hole in the concrete reactor dome before the reactor began operation (and just days before an Israeli election). It delivered 15 delay-fused 2000 pound bombs deep into the reactor structure (the 16th bomb hit a nearby hall). The blasts shredded the reactor and blew out the dome foundations, causing it to collapse on

the rubble. This was the world's first attack on a nuclear reactor.[91]

Since 19 September 1988, Israel has worked on its own satellite recon- naissance system to decrease reliance on U.S. sources. On that day, they launched the Offeq-1 satellite on the Shavit booster, a system closely related to the Jericho-II missile. They launched the satellite to the west away from the Arabs and against the earth's rotation, requiring even more thrust. The Jericho-II missile is capable of sending a one ton nuclear payload 5,000 kilometers. Offeq-2 went up on 3 April 1990. The launch of the Offeq-3 failed on its first attempt on 15 September 1994, but was successful 5 April 1995.[92]

Mordechai Vanunu provided the best look at the Israeli nuclear arsenal in 1985 complete with photographs.[93] A technician from Dimona who lost his job, Vanunu secretly took photographs, immigrated to Australia and published some of his material in the *London Sunday Times*. He was subsequently kidnapped by Israeli agents, tried and imprisoned. His data shows a sophisticated nuclear program, over 200 bombs, with boosted devices, neutron bombs, F-16 deliverable warheads, and Jericho warheads.[94] The boosted weapons shown in the Vanunu photographs show a sophistication that inferred the requirement for testing.[95] He revealed for the first time the underground plutonium separation facility where Israel was producing 40 kilograms annually, several times more than previous estimates. Photographs showed sophisticated designs which scientific experts say enabled the Israelis to build bombs with as little as 4 kilograms of plutonium. These facts have increased the estimates of total Israeli nuclear stockpiles (see Appendix A).[96] In the words of one American, "[the Israelis] can do anything we or the Soviets can do."[97] Vanunu not only made the technical details of the Israeli program and stockpile public but in his wake, Israeli began veiled official acknowledgement of the potent Israeli nuclear deterrent. They began bringing the bomb up the basement stairs if not out of the basement.

Israel went on full-scale nuclear alert again on the first day of Desert Storm, 18 January 1991. Seven SCUD missiles were fired against the cities of Tel Aviv and Haifa by Iraq (only two actually hit Tel

Aviv and one hit Haifa). This alert lasted for the duration of the war, 43 days. Over the course of the war, Iraq launched around 40 missiles in 17 separate attacks at Israel. There was little loss of life: two killed directly, 11 indirectly, with many structures damaged and life disrupted.[98] Several supposedly landed near Dimona, one of them a close miss.[99] Threats of retaliation by the Shamir government if the Iraqis used chemical warheads were interpreted to mean that Israel intended to launch a nuclear strike if gas attacks occurred. One Israeli commentator recommended that Israel should signal Iraq that "any Iraqi action against Israeli civilian populations, with or without gas, may leave Iraq without Baghdad."[100] Shortly before the end of the war the Israelis tested a "nuclear capable" missile which prompted the United States into intensifying its SCUD hunting in western Iraq to prevent any Israeli response.[101] The Israeli Air Force set up dummy SCUD sites in the Negev for pilots to practice on—they found it no easy task.[102] American government concessions to Israel for not attacking (in addition to Israeli Patriot missile batteries) were:

- Allowing Israel to designate 100 targets inside Iraq for the coalition to destroy,
- Satellite downlink to increase warning time on the SCUD attacks (present and future),
- "Technical parity with Saudi jet fighters in perpetuity."[103]

All of this validated the nuclear arsenal in the minds of the Israelis. In particular the confirmed capability of Arab states without a border with Israel, the so-called "second tier" states, to reach out and touch Israel with ballistic missiles confirmed Israel's need for a robust first strike capability.][104] Current military contacts between Israel and India, another nuclear power, bring up questions of nuclear cooperation.[105] Pakistani sources have already voiced concerns over a possible joint Israeli-Indian attack on Pakistan's nuclear facilities.[106] A recent Parameters article speculated on Israel's willingness to furnish nuclear capabilities or assistance to certain states, such as Turkey.[107] A retired Israeli Defense Force Chief of Staff, Lieutenant General Amnon Shahak, has declared, "all methods are acceptable in withholding nuclear capabilities from an

Arab state."[108]

As the Israeli bomb comes out of the basement, open discussion, even in Israel, is occurring on why the Israelis feel they need an arsenal not used in at least two if not three wars. Avner Cohen states: "It [Israel] must be in a position to threaten another Hiroshima to prevent another holocaust."[109] In July 1998 Shimon Peres was quoted in the *Jordan Times* as saying, "We have built a nuclear option, not in order to have a Hiroshima, but to have an Oslo,"[110] referring to the peace process.

One list of current reasons for an Israeli nuclear capability is:

- To deter a large conventional attack,
- To deter all levels of unconventional (chemical, biological, nuclear) attacks,
- To preempt enemy nuclear attacks,
- To support conventional preemption against enemy nuclear assets,
- To support conventional preemption against enemy non-nuclear (conventional, chemical, biological) assets,
- For nuclear warfighting,
- The "Samson Option" (last resort destruction).[111]

The most alarming of these is the nuclear warfighting. The Israelis have developed, by several accounts, low yield neutron bombs able to destroy troops with minimal damage to property.[112] In 1990, during the Second Gulf War, an Israeli reserve major general recommended to America that it "use non-contaminating tactical nuclear weapons" against Iraq.[113] Some have speculated that the Israelis will update their nuclear arsenal to "micronukes" and "tinynukes" which would be very useful to attack point targets and other tactical or barrier (mining) uses.[114] These would be very useful for hardened deeply buried command and control facilities and for airfield destruction without exposing Israeli pilots to combat.[115] Authors have made the point that Israeli professional military schools do not teach nuclear tactics and would not use them in the close quarters of Israel. Many Israeli officers have attended American military schools where they learned tactical use in

crowded Europe.[116]

However, *Jane's Intelligence Review* has recently reported an Israeli review of nuclear strategy with a shift from tactical nuclear warheads to long range missiles.[117] Israel always has favored the long reach, whether to Argentina for Adolph Eichmann, to Iraq to strike a reactor, Entebbe for hostages, Tunisia to hit the PLO, or by targeting the Soviet Union's cities. An esteemed Israeli military author has speculated that Israel is pursuing an R&D program to provide MIRVs (multiple independent reentry vehicles) on their missiles. [118]

The government of Israel recently ordered three German Dolphin Class 800 submarine, to be delivered in late 1999. Israel will then have a second strike capability with nuclear cruise missiles, and this capability could well change the nuclear arms race in the Middle East.[119] Israeli rhetoric on the new submarines labels them "national deterrent" assets. Projected capabilities include a submarine-launched nuclear missile with a 350-kilometer range. [120] Israel has been working on sea launch capability for missiles since the 1960s.[121] The first basing options for the new second-strike force of nuclear missile capable submarines include Oman, an Arab nation with unofficial Israeli relations, located strategically near Iran.[122] A report indicates that the Israel Defense Ministry has formally gone to the government with a request to authorize a retaliatory nuclear strike if Israel was hit with first strike nuclear weapons. This report comes in the wake of a recent Iran Shihab-3 missile test and indications to Israel that Iran is two to three years from a nuclear warhead.[123] Israeli statements stress that Iran's nuclear potential would be problem to all and would require "American leadership, with serious participation of the G-7 . . . ."[124]

A recent study highlighted Israel's extreme vulnerability to a first strike and an accompanying vulnerability even to a false alarm.[125] Syria's entire defense against Israel seems to rest on chemical weapons and warheads.[126] One scenario involves Syria making a quick incursion into the Golan and then threatening chemical strikes, perhaps with a new, more lethal (protective-mask-penetrable)

Russian nerve gas if Israel resists.[127] Their use would drive Israel to nuclear use. Israeli development of an anti- missile defense, the Arrow, a fully fielded (30-50[128]) Jericho II ballistic missile, and the soon-to-arrive strategic submarine force, seems to have produced a coming change in defense force structure. The Israeli newspaper *Ha'aretz*, quotes the Israeli Chief of Staff discussing the establishment of a "strategic command to . . . prepare an adequate response to the long term threats. . . "[129]

The 1994 accord with Jordan, allowing limited Israeli military presence in Jordanian skies, could make the flying distance to several potential adversaries considerably shorter.[130] Israel is concerned about Iran's desire to obtain nuclear weapons and become a regional leader, coupled with large numbers of Shiite Moslems in southern Lebanon. The Israeli Air Force commanding general issued a statement saying Israel would "consider an attack" if any country gets "close to achieving a nuclear capability."[131] The Israelis are obviously considering actions capable of stopping such programs and are buying aircraft such as the F-15I with sufficient operational range. At the first delivery of these 4,000 kilometer range fighters, the Israeli comment was, "the aircraft would help counter a growing nuclear threat."[132] They consider such regional nation nuclear programs to be a sufficient cause for war. Their record of accomplishment is clear: having hit the early Iraqi nuclear effort, they feel vindicated by Desert Storm. They also feel that only the American and Israeli nuclear weapons kept Iraq's Saddam Hussein from using chemical or biological weapons against Israel. [133]

Israel, like Iran, has desires of regional power. The 1956 alliance with France and Britain might have been a first attempt at regional hegemony. Current debate in the Israeli press considers offering Kuwait, Qatar, Oman, and perhaps Syria (after a peace agreement) an Israeli nuclear umbrella of protection.[134] A nuclear Iran or Iraq might use its nuclear weapons to protect some states in the region, threaten others, and attempt to control oil prices.[135]

Another speculative area concerns Israeli nuclear security and possible misuse. What is the chain of decision and control of Israel's

weapons? How susceptible are they to misuse or theft? With no open, frank, public debate on nuclear issues, there has accordingly been no debate or information on existing safeguards. This has led to accusations of "monolithic views and sinister intentions."[1360] Would a right wing military government decide to employ nuclear weapons recklessly? Ariel Sharon, an outspoken proponent of "Greater Israel" was quoted as saying, "Arabs may have the oil, but we have the matches."[137] Could the *Gush Emunim*, a right wing religious organization, or others, hijack a nuclear device to "liberate" the Temple Mount for the building of the third temple? Chances are small but could increase as radicals decry the peace process.[138] A 1997 article reviewing the Israeli Defense Force repeatedly stressed the possibilities of, and the need to guard against, a religious, right wing military coup, especially as the proportion of religious in the military increases.[139]

Israel is a nation with a state religion, but its top leaders are not religious Jews. The intricacies of Jewish religious politics and rabbinical law do affect their politics and decision processes. In Jewish law, there are two types of war, one obligatory and mandatory *(milkhemet mitzvah)* and the one authorized but optional *(milkhemet reshut)*.[140] The labeling of Prime Minister Begin's "Peace for Galilee" operation as a *milchemet brera* ("war of choice") was one of the factors causing it to lose support.[141] Interpretation of Jewish law concerning nuclear weapons does not permit their use for mutual assured destruction. However, it does allow possession and threatening their use, even if actual use is not justifiable under the law. Interpretations of the law allow tactical use on the battlefield, but only after warning the enemy and attempting to make peace. How much these intricacies affect Israeli nuclear strategy decisions is unknown.[142]

The secret nature of the Israeli nuclear program has hidden the increasing problems of the aging Dimona reactor and adverse worker health effects. Information is only now public as former workers sue the government. This issue is now linked to continued tritium production for the boosted anti-tank and anti-missile nuclear warheads that Israeli continues to need. Israel is attempting to obtain

a new, more efficient, tritium production technology developed in India.[143]

One other purpose of Israeli nuclear weapons, not often stated, but obvious, is their "use" on the United States. America does not want Israel's nuclear profile raised.[144] They have been used in the past to ensure America does not desert Israel under increased Arab, or oil embargo, pressure and have forced the United States to support Israeli diplomatically against the Soviet Union. Israel used their existence to guarantee a continuing supply of American conventional weapons, a policy likely to continue.[145]

Regardless of the true types and numbers (see Appendix A) of Israeli nuclear weapons, they have developed a sophisticated system, by myriad methods, and are a nuclear power to be reckoned with. Their nuclear ambiguity has served their purposes well but Israel is entering a different phase of visibility even as their nuclear capability is entering a new phase. This new visibility may not be in America's interest.[146] Many are predicting the Israeli nuclear arsenal will become less useful "out of the basement" and possibly spur a regional arms race. If so, Israel has a 5-10 year lead time at present before mutual assured destruction, Middle East style, will set in. Would regional mutual second strike capability, easier to acquire than superpower mutual second strike capability, result in regional stability? Some think so.[147] Current Israeli President Ezer Weizman has stated "the nuclear issue is gaining momentum [and the] next war will not be conventional.[148]

Appendix A

Estimates of the Israeli Nuclear Arsenal

1967: 13 bombs [149]
2 bombs [150]

1969: 5-6 bombs of 19 kilotons yield each [151]

1973: 13 bombs [152]
20 nuclear missiles and have developed a "suitcase bomb" [153]

1974: 3 nuclear capable artillery battalions each with 12 175mm tubes & a total of 108 warheads [154]
10 bombs [155]

1976: 10-20 nuclear weapons [156]

1980: 200 bombs [157]

1984: 12-31 atomic bombs [158]
31 plutonium bombs and 10 uranium bombs [159]

1985: at least 100 nuclear bombs [160]

1986: 100-200 fission bombs and a number of fusion bombs [161]

1991: 50-60 to 200-300 [162]

1992: >200 bombs [163]

1994: 64-112 bombs (@ 5 kg/warhead) [164]
50 nuclear tipped Jericho missiles, 200 total [165]

1995: 66-116 bombs (@ 5 kg/warhead) [166]
70-80 weapons [167]
"A complete repertoire"(neutron bombs, nuclear mines, suitcase bombs, submarine borne) [168]

1996: 60-80 Plutonium weapons, maybe >100 assembles, ER variants, variable yields [169]
Possibly 200-300 [170]
50-90 Plutonium weapons, could have well over 135. 50-100 Jericho I and 30-50 Jericho II missiles. [171]

1997: >400 deliverable thermonuclear and nuclear weapons [172]

Notes

1. Hersh, Seymour M., The Samson Option. *Israel's Nuclear*

Arsenal and American Foreign Policy (New York: Random House, 1991), 223.

2. Aronson, Slomo and Brosh, Oded, *The Politics and Strategy of Nuclear Weapons in the Middle East, the Opacity Theory, and Reality, 1960-1991-An Israeli Perspective* (Albany, New York: State University of New York Press, 1992), 20.

3. Karsh, Efraim, *Between War and Peace: Dilemmas of Israeli Security* (London, England: Frank Cass, 1996), 82.

4. Cohen, Avner, *Israel and the Bomb* (New York: Columbia University Press, 1998), 16.

5. Cordesman, Anthony, *Perilous Prospects: The Peace Process and the Arab-Israeli Military Balance* (Boulder, Colorado: Westview Press, 1996), 118.

6. Pry, Peter, *Israel's Nuclear Arsenal* (Boulder, Colorado: Westview, 1984), 5-6.

7. Quoted in Weissman, Steve and Krosney, Herbert. *The Islamic Bomb: The Nuclear Threat to Israel and the Middle East.* (New York, New York: Times Books, 1981), 105.

8. "Former Official Says France Helped Build Israel's Dimona Complex." *Nucleonics Week* October 16, 1986, 6.

9. Milhollin, Gary, "Heavy Water Cheaters." *Foreign Policy* (1987-88): 101-102.

10. Cordesman, 1991, 127.

11. Federation of American Scientists, "Israel's Nuclear Weapons Program." 10 December 1997, n.p. On-line. Internet, 27 October 1998. Available from http://www.fas.org/nuke/hew/Israel/Isrhist.html.

12. Nashif, Taysir N., *Nuclear Weapons in Israel* (New Delhi: S. B. Nangia Books, 1996), 3.

13. Cohen, *Israel and the Bomb*, 48-49.

14. Bennett, Jeremy, *The Suez Crisis*. BBC Video. n.d. Videocassette and Raviv, Dan and Melman, Yossi. *Every Spy a Prince. The Complete History of Israel's Intelligence Community*. (Boston, Massachusetts: Houghton Mifflin Company, 1990), 63-69.

15. Weissman and Krosney, 112.

16. "Revealed: The Secrets of Israel's Nuclear Arsenal" (London) *Sunday Times* No. 8,461, 5 October 1986, 1, 4-5.

17. Cohen, *Israel and the Bomb*, 57-59.

18. Peres, Shimon, *Battling for Peace. A Memoir* (New York, New York: Random House, 1995), 122.

19. Pry, 10.

20. Loftus, John and Aarons, Mark, *The Secret War Against the Jews. How Western Espionage Betrayed the Jewish People* (New York, New York: St. Martin's Griffin, 1994), 287-303.

21. Green, Stephen, *Taking Sides. America's Secret Relations with a Militant Israel* (New York: William Morrow and Company, 1984), 152.

22. Cohen, Avner, "Most Favored Nation." *The Bulletin of the Atomic Scientists*. 51, no. 1 (January-February 1995): 44-53.

23. Hersh, *The Samson Option*, 196.

24. See Cohen, Avner, "Israel's Nuclear History: The Untold Kennedy-Eshkol Dimona Correspondence." *Journal of Israeli History*, 1995 16, no. 2, 159-194 and Cohen, Avner, Comp. "Recently Declassified 1963 Correspondence between President Kennedy and Prime Ministers Ben-Gurion and Eshkol." *Journal of Israeli History*, 1995 16, no. 2, 195-207. Much of the documentation has been posted to http:\\www.seas.gwu.edu/nsarchive/israel.

25. Weissman and Krosney, op. cit.,114-117

26. Cohen, op. cit., *Israel and the Bomb*, 82-83.

27. Spector, Leonard S., *The Undeclared Bomb* (Cambridge, Massachusetts: Ballinger Publishers, 1988), 387 (n.22).

28. Quoted in Stevens, Elizabeth. "Israel's Nuclear Weapons—A Case Study." 14 pages. On line. Internet, 23 October 1998. Available from http://infomanage.com/nonproliferation/najournal/israelinucs.html.

29. Green, *Taking Sides*, 148-179 and Raviv, Dan and Melman, Yossi, 1990, 197-198.

30. Weissman and Krosney, 119-124.

31. Black, Ian and Morris, Benny, *Israel's Secret Wars. A history of Israel's Intelligence Services* (New York, New York: Grove Weidenfeld, 1991), 418-419.

32. Hersh, 257.

33. Green, Stephen, *Living by the Sword: America and Israel in the Middle East, 1968-1987* (London: Faber, 1988), 63-80.

34. Cordesman, 1991, 120.

35. Weissman and Krosney, 124-128 and Raviv, Dan and Melman, Yossi, 1990, 198-199.

36. Spector, *The Undeclared Bomb*, 395(n. 57).98-199

37. Raviv, Dan and Melman, Yossi, 1990, 58.

38. Milhollin, 100-119.

39. Stanghelle, Harold, "Israel to sell back 10.5 tons." *Arbeiderbladet*, Oslo, Norway, 28 June 1990 in: Center for Nonproliferation Studies, "Nuclear Developments," 28 June 1990, 34-35; on-line, Internet 22 November 1998, available from

http://cns.miis.edu.

40. Hersh, op. cit., 139.

41. Center for Nonproliferation Studies. "Israeli Friends," *ISIS Report*, May 1994, 4; on-line, Internet 22 November 1998, available from http://cns.miis.edu.

42. Abecasis, Rachel, "Uranium reportedly offered to China, Israel." *Radio Renascenca*, Lisbon, 9 December 1992 quoted in Center for Nonproliferation, "Proliferation Issues," 23 December, 1992, 25; on-line, Internet 22 November 1998, available from http://cns.miis.edu.

43. Cohen, *Israel and the Bomb*, op. cit., 231-232 and 256-257.

44. Nordeen, Lon O., Nicolle, David, *Phoenix over the Nile* (Washington, D.C.: Smithsonian Institute Press, 1996), 192-193.

45. O'Balance, Edgar, *The Third Arab-Israeli War* (London: Faber and Faber, 1972), 54.

46. Brecher, Michael, *Decision in Crisis. Israel, 1967 and 1973* (Berkley, California: University of California Press, 1980), 104, 230-231.

47. Cohen, Avner. "Cairo, Dimona, and the June 1967 War." Middle East Journal 50, no. 2 (Spring 1996), 190-210.

48. Creveld, Martin van. *The Sword and the Olive. A Critical History of the Israeli Defense Force* (New York, New York: Public Affairs, 1998), 174.

49. Burrows, William E. and Windrem, Robert, *Critical Mass. The Dangerous Race for Superweapons in a Fragmenting World* (New York, New York: Simon and Schuster, 1994), 282-283.

50. Aronson, Shlomo, *Israel's Nuclear Options, ACIS Working Paper No. 7.* Los Angeles, California: University of California Center for Arms Control and International Security, 1977, 3, and

Sorenson, David S., *"Middle East Regional Studies-AY99,"* Air War College: Maxwell Air Force Base, AL, 542.

51. Hersh, op. cit., 126-128.

52. Cohen, *Israel and the Bomb*, op. cit., 210-213.

53. Spector, Leonard S., "Foreign-Supplied Combat Aircraft: Will They Drop the Third World Bomb?" *Journal of International Affairs* 40, no. 1(1986): 145 (n. 5) and Green, *Living by the Sword*, op. cit., 18-19.

54. Burrows and Windrem, op. cit., 280.

55. Cohen, op. cit., *Israel and the Bomb*, 237.

56. Ibid., 273-274.

57. Milhollin, op. cit., 103-104.

58. Raviv, Dan and Melman, Yossi, *Friend in Deed: Inside the U.S.-Israel Alliance* (New York New York: Hyperion, 1994), 299.

59. Burrows and Windrem, op. cit., 464-465 and Raviv, Dan and Melman, Yossi, op. cit., 1990, 304-305.

60. Spector, *The Undeclared Bomb*, op. cit., 179.

61. Dowty, Alan. "Israel and Nuclear Weapons." *Midstream* 22, no. 7 (November 1976), 8-9.

62. Hersh, op. cit., 217, 222-226, and Weissman and Krosney, op. cit., 107.

63. Green, op. cit., *Living by the Sword*, 90-99.

64. Loftus and Aarons, op. cit., 316-317.

65 Smith, Gerard C. and Cobban, Helena. "A Blind Eye To Nuclear Proliferation." *Foreign Affairs* 68, no. 3(1989), 53-70.

66. Hersh, op. cit., 230-231.

67. O'Balance, Edgar, *No Victor, No Vanquished. The Yom Kippur War* (San Rafael, California: Presido Press, 1978), 175.

68. Ibid., 234-235 and Aronson, S, op. cit., 15-18.

69. Spector, *The Undeclared Bomb*, op. cit., 396 (n. 62); Garthoff, Raymond L., *Détente and Confrontation: American-Soviet Relations from Nixon to Reagan* (Washington, DC: The Brookings Institute, 1994), 426, n76 and Bandmann, Yona and Cordova, Yishai. "The Soviet Nuclear Threat Towards the Close of the Yom Kippur War." *Jerusalem Journal of International Relations* 1980 5, no. 1, 107-9.

70. Cherkashin, Nikolai, "On Moscow's Orders." *Russian Life,* 39, no. 10 (October 1996), 13-15.

71. Brownlow, Cecil. "Soviets poise three-front global drive. Nuclear weapons in Egypt, artillery buildup at Guantanamo, Communist concentrations in Vietnam aimed at political gains." *Aviation Week and Space Technology* 99, no. 19 (5 November 1973), 12-14; Holt, Robert. "Soviet Power Play." *Aviation Week and Space Technology* 99, no. 19 (5 November 1973), 7 and Gur-Arieh, Danny, "A non-Conventional Look at Israel During '73 War." *IsraelWire* Tuesday, October 6, 1998 17, 23; on-line, Internet 20 November 1998, available from http://www.israelwire.com/new/981006/9810068.html.

72. Hersh, op. cit., 321-235.

73. Creveld, 1998, op. cit., 220-221.

74. Evron, Yair, *Israel's Nuclear Dilemma* (Ithaca, New York: Cornell Publishing, 1994), 62-74.

75. Cohen, Avner, "Peres: Peacemaker, Nuclear Pioneer." *The Bulletin of the Atomic Scientists.* 52, no. 3 (May/June 1996), 16-17 and Aronson, S, op. cit., 11-12.

76. Karsh, op. cit., 86.

77. Quoted in Hersh, op. cit., 180 and Stevens, op. cit., 1-14.

78. Hersh, op. cit., 216, 276 and Kaku, Michio. "Contingency Plans: Nuclear Weapons after the Cold War." *In Altered States: A Reader in the New World Order,* Bennis, Phyllis and Moushabeck, Michel, Eds. (New York, New York: 1993), 66.

79. Weissman and Krosney, op. cit., 109.

80. Gillette, Robert, "Uranium Enrichment: Rumors of Israeli Progress with Lasers." *Science* 183, no. 4130 (22 March 1974), 1172-1174.

81. Barnaby, Frank, *The Invisible Bomb: The Nuclear Arms Race in the Middle East* (London: I. B. Tauris, 1988), 25.

82. "Israel: The Covert Connection." *Frontline,* PBS Network, May 16, 1989, quoted in Spector, Leonard S., and McDonough, Mark G., with Medeiros, Evan S., *Tracking Nuclear Proliferation. A Guide in Maps and Charts, 1995* (Washington, DC: Carnegie Endowment for International Peace, 1995).

83. Nashif, Taysir N., *Nuclear Weapons in the Middle East: Dimensions and Responsibilities* (Princeton, New Jersey: Kingston Press, 1984), 22-23.

84. Hersh, op. cit., 216.

85. Barnaby, Frank, "Capping Israel's Nuclear Volcano," *Between War and Peace. Dilemmas of Israeli Security,* edited by Efraim Karsh (London, England: Frank Cass, 1996), 98.

86. Hersh, op. cit., 271-275.

87. Nashif, op. cit., 32.

88. Gaffney, Mark, *Dimona: The Third Temple? The Story Behind the Vanunu Revelation* (Brattleboro, Vermont: Amana Books, 1989),

100-101.

89. Pedatzur, Re'uven, "South African Statement On Nuclear Test Said to Serve Israel," *Ha'aretz*, 29 July 1997. On line: Internet, 22 November 1998 and Kelley, Robert. "The Iraqi and South African Nuclear W"ôNuclear Abstracts," 1 March 1996, or on-line, Internet, 22 November 1998, both available from http://cns.miis.edu.

90. "Was there a Nuclear Test near Eilat?" *IsraelWire*, 16 June 1998, or on line Internet, 22 November, 1998, available from http://www.israelwire.com and "Deputy Defense Minister Denies Israeli Nuclear Testing." *Israeli Wire*, June 18, 1998, or on-line. Internet, 13 October 1998, available from http://www.israelwire.com/New/980618/9806184.html.

91. McKinnon, Dan. *Bullseye One Reactor. The Story of Israel's Bold Surprise Air Attack That Destroyed Iraqi's Nuclear Bomb Facility* (Shrewsbury, England: Airlife Publishing Ltd., 1987).

92. "Russian Foreign Intelligence Service, Report on the Proliferation of Weapons of Mass Destruction, Moscow, 1993." *Journal of Palestine Studies* XXII, no. 4 (Summer 1993): 135-140; Creveld, Martin van, *Nuclear Proliferation and the Future Of Conflict* (New York: The Free Press, 1993), 105; and Clark, Philip. "ôThird successful Israeli satellite launch." *Jane's Intelligence Review* 7, no. 6 (June 1995), 25-26.

93. Sunday Times, London, op. cit., 1,4-5.

94. Toscano, Louis, *Triple Cross: Israel, the Atomic Bomb and the Man Who Spilled the Secrets* (New York: Carol Publishing Group, 1990).

95. Green, *Living by the Sword*, op. cit., 134.

96. Spector, *The Undeclared Bomb*, op. cit., 165-166.

97. Hersh, op. cit., 291.

98. Levran, Aharon, *Israeli Strategy after Desert Storm: Lessons*

from the Second Gulf War (London: Frank Cass, 1997), 1-10.

99. Burrows and Windrem, op. cit., 278.

100. Cohen, Avner and Miller, Marvin, N*uclear Shadows in the Middle East: Prospects for Arms Control in the Wake of the Gulf Crisis* (Cambridge, Massachusetts: Massachusetts Institute of Technology, 1990), 10.

101. Aronson and Brosh, op. cit., 276.

102. Raviv and Melman, op. cit., 399.

103. Burrows and Windrem, op. cit., 297n and Creveld, 1998, op. cit., 321-322.

104. Levran, op. cit., 8-10.

105. Ahmar, Moonis, "Pakistan and Israel: Distant Adversaries or Neighbors?" *Journal of South Asian and Middle Eastern Studies,* 1996, 20, no.1, 43-44.

106. "Nuclear proliferation didn't start in 1998 . . .and not in Pakistan nor with Islam," *Middle East Realities*, or on-line, Internet, 21 September 1998, available from http://www.middleeast.org/1998_06_28.htm.

107. Garrity, Patrick J. "The Next Nuclear Questions." *Parameters,* XXV, no. 4 (Winter 1995-96), 92-111.

108. Cohen, Eliezer. *Israel's best defense: the First Full Story of the Israeli Air Force,* (New York, New York: Random House, 1993), 495.

109. Cohen and Miller, op. cit., 18.

110. "Before Meeting with King, Peres Claims Israel's Nuclear Arsenal was built for Peace," *Jordan Times*, July 14, 1998. Quoted in Sorenson, op. cit., 542.

111. Beres, Louis Rene, "Israel's Bomb in the Basement: A

revisiting of `Deliberate Ambiguity' vs. `Disclosure', *Between War and Peace: Dilemmas of Israeli Security,* edited by Efraim Harsh (London, England: Frank Cass, 1996), 113-133.

112. Hersh, op. cit., 319.

113. Amos, Deborah, *Lines in the Sand: Desert Storm and the Remaking of the Arab World* (New York, New York: Simon and Schuster, 1992), 105.

114. Dowler, Thomas W. and Howard II, Joseph H., "Countering the threat of the well-armed tyrant: A modest proposal for small nuclear weapons," *Strategic Review*, XIX, no. 4 (Fall 1991), 34-40.

115. Beres, Louis Rene, "Israel's bomb in the basement: A revisiting of `Deliberate Ambiguity' vs. `Disclosure.' " In Karsh, Efraim, op. cit., Editor, *Between War and Peace: Dilemmas of Israeli Security* (London, England: Frank Cass, 1996), 116.

116. Cordesman, op. cit., 1996, 265.

117. Hough, Harold, "Israel reviews its nuclear deterrent," *Jane's Intelligence Review* 10, no.11 (November 1998), 11-13.

118. Creveld, op. cit., 1993, 105.

119. Burrows, and Windrem, op. cit., 311-312 and "Israel begins test of nuclear missile submarines," *The Irish Times*, July 2, 1998, or on-line, Internet, 24 December 1998, available from http://www.irish-times.com/irish-times/paper/1998/0702/wor13.html.

120. Melman, Yossi, "Swimming with the Dolphins," *Ha'aretz*, Tuesday, June 9, 1998, and "Report: Israel to get Subs with Nuclear Strike Capability," *Jerusalem Post*, I July 3, 1998, 3 and Sorenson, op. cit., 543.

121. Raviv, Dan and Melman, Yossi, op. cit., 1990, 344-345, 422-423.

122. Shahak, Israel, *Open Secrets: Israeli Nuclear and Foreign Policies* (London: Pluto Press, 1997), 72-73.

123. Davis, Douglas, "Defense Officials Said Urging Nuclear Second-Strike Capability," *Jerusalem Post*, 6 August 1998, 3; or on-line, Internet, 22 November 1998, available from http://cns.miis.edu.

124. Inbar, Efraim, "Israel's security in a new international environment," in Karsh, Efraim, Editor, *Between War and Peace: Dilemmas of Israeli Security* (London, England: Frank Cass, 1996), 41.

125. Hough, Harold, "Could Israel's Nuclear Assets Survive a First Strike?" *Jane's Intelligence Review,* September 1997, 407-410.

126. Terrill, W. Andrew, "The Chemical Warfare Legacy of the Yemen War." *Comparative Strategy*, 10 (1991), 109-119.

127. Boyne, Sean, "Across the Great Divide. Will Assad go for the Golan?" *Jane's Intelligence Review,* 10, no. 4 (April 1998), 21-24 and Cordesman, 1996, op. cit., 254.

128. Cordesman, op. cit., 1996, 243.

129, Harel, Amos and Barzilai, Amnon, "Mordechai says Arrow alone cannot protect against missiles," *Ha'aretz*, 13 January 1999, or on-line, Internet, 13 January 1999, available from http://www3.haaretz.co.il/eng/htmls/3_9.htm

130. Shahak, op. cit., 78-79.

131. Chubin, Shahram, "Does Iran Want Nuclear Weapons?" *Survival* 37, no. 1 (Spring 1995), 91-93.

132. O'Sullivan, Arich, "New F-15I Warplanes Expand Israel's Reach," *The Jerusalem Post*, 19 January 1997, or on-line, Internet 22 November 1998, available from http://www.jpost.co.il.

133. Karsh, op. cit., 9.

134. Shahak, op. cit., 4-5.

135. Garrity, op. cit., 92-111.

136. Dowty, op. cit., 8.

137. Gaffney, op. cit., 165.

138. Ibid., 37-38 and Friedman, Robert I. *Zealots for Zion: Inside Israel's West Bank Settlement Movement* (New York, New York: Random House, 1992), 132-52.

139. Blanche, Ed, "Is the Myth Fading for the Israeli Army? — Part 1." *Jane's Intelligence Review,* 8, no. 12 (December 1996), 547-550 and Blanche, Ed. "Is the myth fading for the Israeli Army? — Part 2," *Jane's Intelligence Review* 9, no. 1 (January 1997), 25-28.

140. Cohen, Stuart A., *The Scroll or the Sword? Dilemmas of Religion and Military Service in Israel* (Amsterdam, Netherlands: Harwood Academic Publishers, 1997), 11-24.

141. Creveld, op. cit., 1998, 298.

142. Broyde, Michael J., "Fighting the War and the Peace: Battlefield Ethics, Peace Talks, Treaties, and Pacifism in the Jewish Tradition," or on-line, Internet, 20 November 1998, available from http://www.jlaw.com/Articles/war3.html.

143. Hough, Harold, op. cit., 1998, 11-12 and Berger, Julian, "Court Fury At Israeli Reactor." *Guardian,* 13 October 1997, in Center for Nonproliferation, "Nuclear Abstracts," 13 October 1997, or on-line, Internet, 22 November 1998, available from http://cns.miis.edu.

144. Creveld, op. cit., 1998, 252.

145. Valry, Nicholas, "Israel's Silent Gamble with the Bomb," *New Scientist* (12 December 1974), 807-09.

146. Harden, Major James D., *Israeli Nuclear Weapons and War in*

the Middle East, Master's Thesis, Naval Postgraduate School, Monterey, CA, December 1997.

147. Dowdy, op. cit., 20.

148. Aronson, Geoffrey, "Hidden Agenda: US-Israeli Relations and the Nuclear Question," *Middle East Journal*, 46, no. 4 (Autumn 1992), 619-630.

149. Data from *Time*, 12 April 1976, quoted in Weissman and Krosney, op. cit., 107.

150. Burrows and Windrem, op. cit., 280 and Cohen, *Israel and the Bomb*, op. cit., 273-274.

151. Tahtinen, Dale R., *The Arab-Israel Military Balance Today* (Washington, DC: American Enterprise Institute for Public Policy Research, 1973), 34.

152. "How Israel Got the Bomb." *Time*, 12 April 1976, 39.

153. Burrows and Windrem, op. cit., 302.

154. Kaku, op. cit., 66 and Hersh, op. cit., 216.

155. Valéry, op. cit., 807-09.

156. Data from CIA, quoted in Weissman and Krosney, op. cit., 109.

157. Ottenberg, Michael, "Estimating Israel's Nuclear Capabilities," *Command*, 30 (October 1994), 6-8.

158. Pry, op. cit., 75.

159. Ibid., 111.

160. Data from NBC Nightly News, quoted in Milhollin, op. cit., 104 and Burrows and Windrem, op. cit., 308.

161. Data from Vanunu quoted in Milhollin, op. cit., 104.

162. Harkavy, Robert E. "After the Gulf War: The Future of the Israeli Nuclear Strategy," *The Washington Quarterly* (Summer 1991), 164.

163. Burrows and Windrem, op. cit., 308.

164. Albright, David, Berkhout, Frans and Walker, William, *Plutonium and Highly Enriched Uranium 1996. World Inventories, Capabilities, and Policies* (New York: Stockholm International Peace Research Institute And Oxford University Press, 1997), 262-263.

165. Hough, Harold, "Israel's Nuclear Infrastructure," *Jane's Intelligence Review* 6, no. 11 (November 1994), 508.

166. Ibid., 262-263.

167. Spector, and McDonough, with Medeiros, op. cit., 135.

168. Burrows and Windrem, op. cit., 283-284.

169. Cordesman, op. cit., 1996, 234.

170. Ibid., 234.

171. Ibid., 230, 243.

172. Brower, Kenneth S., "A Propensity for Conflict: Potential Scenarios and Outcomes of War in the Middle East," *Jane's Intelligence Review*, Special Report no. 14, (February 1997), 14-15.

173. Albright, Berkhout, and Walker, op. cit., 262-263.

USAF Counterproliferation Center

The USAF Counterproliferation Center was established in 1998 to provide education and research to the present and future leaders of the USAF, and thereby help them better prepare to counter the threat from weapons of mass destruction.

Barry R. Schneider, Director

USAF Counterproliferation Center
325 Chennault Circle
Maxwell AFB AL 36112-6427k

(334) 953-7538 (DSN (493-7538)

Email: Barry.Schneider@maxwell,af.mil

F.3 ☐ I/We have attached a report from a health physicist or other individual with expertise in radiation dose reconstruction documenting the limitations of existing DOE or AWE records on radiation exposures at the facility, as relevant to the petition. The report specifies the basis for believing these documented limitations might prevent the completion of dose reconstructions for members of the class under 42 CFR Part 82 and related NIOSH technical implementation guidelines.

(Attach report to the back of the petition form.)

F.4 ☒ I/We have attached a scientific or technical report, issued by a government agency of the Executive Branch of Government or the General Accounting Office, the Nuclear Regulatory Commission, or the Defense Nuclear Facilities Safety Board, or published in a peer-reviewed journal, that identifies dosimetry and related information that are unavailable (due to either a lack of monitoring or the destruction or loss of records) for estimating the radiation doses of employees covered by the petition.

(Attach report to the back of the petition form.)

Go to Page 6

G Signature of Person(s) Submitting this Petition — Complete Section G.

All Petitioners should sign and date the petition. A maximum of three persons may sign the petition.

12-06-2005
Date

Signature Date

Signature Date

Notice: Any person who knowingly makes any false statement, misrepresentation, concealment of fact or any other act of fraud to obtain compensation as provided under EEOICPA or who knowingly accepts compensation to which that person is not entitled is subject to civil or administrative remedies as well as felony criminal prosecution and may, under appropriate criminal provisions, be punished by a fine or imprisonment or both. I affirm that the information provided on this form is accurate and true.

Send this form to:

SEC Petition
Office of Compensation Analysis and Support
NIOSH
4676 Columbia Parkway, MS-C-47
Cincinnati, OH 45226

If there are additional petitioners, they must complete the Appendix forms for additional petitioners. The Appendix forms are located at the end of this document.

Name or Social Security Number of First Petitioner:

PittsburghLIVE.com
Valley News Dispatch

Review finds overexposure to radiation

By Mary Ann Thomas
VALLEY NEWS DISPATCH
Monday, September 16, 2002

Tools
Print this article
E-mail this article
Subscribe to this paper
Larger / Smaller Text

COPYRIGHTED MATERIAL

ADDED TO SUBMISSION AT APPLICANT'S REQUEST

Sundin, David S.

From: NIOSH OCAS
Sent: Monday, December 12, 2005 7:34 AM
To: Sundin, David S.; Rutherford, LaVon B
Subject: FW: PittsburghLIVE.com - Agency faced conflicts in promoting and regulating nuclear energy

Please see the email below. It was received in the OCAS inbox. This individual would like information added to their SEC petition.

-----Original Message-----
From:
Sent: Sunday, December 11, 2005 9:27 PM
To: NIOSH OCAS
Subject: PittsburghLIVE.com - Agency faced conflicts in promoting and regulating nuclear energy

asked us to send you this article from PittsburghLIVE.com.

Comment from Here is the article if you can put it at the back of my petition Thankyou

---

AGENCY FACED CONFLICTS IN PROMOTING AND REGULATING NUCLEAR ENERGY You can't have the inmates running the asylum. But that's just what watchdog groups and even some former government officials say is the case when it comes to the nation's nuclear energy programs.

To read the entire article, visit:
1. Click here: http://www.pittsburghlive.com/x/tribune-review/specialreports/buriedlegacy/s_87958.html
2. Or visit http://www.pittsburghlive.com and type in NewsCode: 87958

For the most comprehensive coverage of local news and sports in western Pennsylvania, visit http://www.pittsburghlive.com