SEC 45

Special Exposure Cohort Petition
under the Energy Employees Occupational Illness Compensation Act

10-24-05A11:11 RCVD

U.S. Department of Health and Human Services
Centers for Disease Control and Prevention
National Institute for Occupational Safety and Health

OMB Number: 0920-0639 Expires: 05/31/2007

Special Exposure Cohort Petition — Form B

Use of this form and disclosure of Social Security Number are voluntary. Failure to use this form or disclose this number will not result in the denial of any right, benefit, or privilege to which you may be entitled.

General Instructions on Completing this Form *(complete instructions are available in a separate packet)*:

Except for signatures, please **PRINT** all information clearly and neatly on the form.

Please read each of Parts A — G in this form and complete the parts appropriate to you. If there is more than one petitioner, then each petitioner should complete those sections of parts A – C of the form that apply to them. Additional copies of the first two pages of this form are provided at the end of the form for this purpose. A maximum of three petitioners is allowed.

If you need more space to provide additional information, *use the continuation page provided at the end of* the form and attach the completed continuation page(s) to Form B.

If you have questions about the use of this form, please call the following NIOSH toll-free phone number and request to speak to someone in the Office of Compensation Analysis and Support about an SEC petition: **1-800-356-4674.**

If you are:			
	☐ A Labor Organization,	Start at D	on Page 3
	☐ An Energy Employee (current or former),	Start at C	on Page 2
	☐ *A Survivor (of a former Energy Employee),*	*Start at B*	*on Page 2*
	☑ A Representative (of a current or former Energy Employee),	Start at A	on Page 1

A Representative Information — Complete Section A if you are authorized by an Employee or Survivor(s) to petition on behalf of a class.

A.1 **Are you a contact person for an organization?** ☐ Yes (Go to A.2) ☑ No (Go to A.3)

A.2 **Organization Information:**

Name of Organization

Position of Contact Person

A.3 **Name of Petition Representative:**

Mr./Mrs./Ms. First Name Middle Initial Last Name

A.4 **Address:**

Street Apt # P.O. Box

City State Zip Code

A.5 **Telephone Number:**

A.6 **Email Address:**

A.7 ☑ Check the box at left to indicate you have attached to the back of this form written authorization to petition by the survivor(s) or employee(s) indicated in Parts B or C of this form. An authorization

If you are representing a Survivor, go to Part B; if you are representing an Employee, go to Part C.

Name or Social Security Number of First Petitioner: _____

B Survivor Information — Complete Section B if you are a Survivor or representing a Survivor.

B.1 **Name of Survivor:**

Mr./Mrs./Ms. First Name Middle Initial Last Name

B.2 **Social Security Number of Survivor:**

B.3 **Address of Survivor:**

Street Apt # P.O. Box

City State Zip Code

B.4 **Telephone Number of Survivor:** ( ) -

B.5 **Email Address of Survivor:**

B.6 **Relationship to Employee:** ☐ Spouse ☐ Son/Daughter ☐ Parent ☐ Grandparent ☐ Grandchild

Go to Part C

C Employee Information — Complete Section C UNLESS you are a labor organization.

C.1 **Name of Employee:**

Mr./Mrs./Ms. First Name Middle Initial Last Name

C.2 **Former Name of Employee** (e.g., maiden name/legal name change/other):

N/A

Mr./Mrs./Ms. First Name Middle Initial Last Name

C.3 **Social Security Number of Employee:**

C.4 **Address of Employee** (if living):

N/A

Street Apt # P.O. Box

City State Zip Code

C.5 **Telephone Number of Employee:** ( ) -

C.6 **Email Address of Employee:**

C.7 **Employment Information Related to Petition:**

C.7a Employee Number (if known): N/A

C.7b Dates of Employment: Star 1947 End 1987

C.7c Employer Name: Blockson Chemical Company

C.7d Work Site Location: Building 55, Joliet, Illinois

C.7e Supervisor's Name: Unknown

Go to Part E.

Name or Social Security Number of First Petitioner:

D Labor Organization Information — Complete Section D ONLY if you are a labor organization.

D.1 **Labor Organization Information:**

_____
Name of Organization

_____
Position of Contact Person

D.2 **Name of Petition Representative:**

_____

D.3 **Address of Petition Representative:**

_____
Street Apt # P.O. Box

_____
City State Zip Code

D.4 **Telephone Number of Petition Representative:** (____) ____-_____

D.5 **Email Address of Petition Representative:** _____

D.6 **Period during which labor organization represented employees covered by this petition** (please attach documentation): Start _____ End _____

D.7 **Identity of other labor organizations that may represent or have represented this class of employees** (if known):

_____

Go to Part E.

Name or Social Security Number of First Petitioner: _ _____

E Proposed Definition of Employee Class Covered by Petition — Complete Section E.

E.1 **Name of DOE or AWE Facility:** Blockson Chemical Company

E.2 **Locations at the Facility relevant to this petition:**

Building 55

E.3 **List job titles and/or job duties of employees included in the class. In addition, you can list by name any individuals other than petitioners identified on this form who you believe should be included in this class:**

All

E.4 **Employment Dates relevant to this petition:**

Start 1952 End 1962

Start _____ End _____

Start _____ End _____

E.5 **Is the petition based on one or more unmonitored, unrecorded, or inadequately monitored or recorded exposure incidents?:** ☑ Yes ☐ No

If yes, provide the date(s) of the incident(s) and a complete description (attach additional pages as necessary):

From 1952 through 1962, workers of Building 55 at the Blockson Chemical Co. in Joliet, Illinois extracted approximately 2 million pounds of uranium under a secret government contract. The entire process was conducted in a one-story, 100 foot by 175 foot building.

Workers in Building 55 were unaware of any exposure to radiological materials. They were not provided with any protective gear, the building had no ventilation systems and workers worked hours far in excess of the standard 40-hour work week. Conditions were so severe, in fact, that women were given an allowance for pantyhose because the radiation would "eat" their pantyhose in the time it took them to walk from their car to the building.

As a result of the horendous conditions, the majority of the workers have acquired some form of carcinoma.

Go to Part F.

Name or Social Security Number of First Petitioner: ___ _____

F Basis for Proposing that Records and Information are Inadequate for Individual Dose — Complete Section F.

Complete **at least one** of the following entries in this section by checking the appropriate box and providing the required information related to the selection. You are not required to complete more than one entry.

F.1 ☑ I/We have attached either documents or statements provided by affidavit that indicate that radiation exposures and radiation doses potentially incurred by members of the proposed class, that relate to this petition, were not monitored, either through personal monitoring or through area monitoring.

(Attach documents and/or affidavits to the back of the petition form.)

Describe as completely as possible, to the extent it might be unclear, how the attached documentation and/or affidavit(s) indicate that potential radiation exposures were not monitored.

Section 2.0 – Site Description, Operational History and Process
→ See paragraph 5, which states in part:
"Personell with [FUSRAP] conducted records searches for information regarding the uranium recovery activities at Blackson. No records of health and safety inspections by the AEC were found as a result of their search...."

F.2 ☑ I/ We have attached either documents or statements provided by affidavit that indicate that radiation monitoring records for members of the proposed class have been lost, falsified, or destroyed; or that there is no information regarding monitoring, source, source term, or process from the site where the employees worked.

(Attach documents and/or affidavits to the back of the petition form.)

Describe as completely as possible, to the extent it might be unclear, how the attached documentation and/or affidavit(s) indicate that radiation monitoring records for members of the proposed class have been lost, altered illegally, or destroyed.

Section 2.0 – Site Description, Operational History and Process
→ See Paragraph 4 which states in part:
"The actual amount of uranium produced for the AEC is not known."
→ See Paragraph 5 which states in part:
"No records of health and safety inspection by the AEC were found...."
→ Page 8 of 19: "No air monitoring data were found...."

Part F is continued on the following page.

Name or Social Security Number of First Petitioner: _____

F.3 ☑ I/We have attached a report from a health physicist or other individual with expertise in radiation dose reconstruction documenting the limitations of existing DOE or AWE records on radiation exposures at the facility, as relevant to the petition. The report specifies the basis for believing these documented limitations might prevent the completion of dose reconstructions for members of the class under 42 CFR Part 82 and related NIOSH technical implementation guidelines.

(Attach report to the back of the petition form.)

F.4 ☑ I/We have attached a scientific or technical report, issued by a government agency of the Executive Branch of Government or the General Accounting Office, the Nuclear Regulatory Commission, or the Defense Nuclear Facilities Safety Board, or published in a peer-reviewed journal, that identifies dosimetry and related information that are unavailable (due to either a lack of monitoring or the destruction or loss of records) for estimating the radiation doses of employees covered by the petition.

(Attach report to the back of the petition form.)

Go to Part G.

G Sign[redacted]ition — Complete Section G.

All Petitione[redacted]. A maximum of three persons may sign the petition.

Sign[redacted] 10/19/2005
Date

Signature Date

Signature Date

Notice: Any person who knowingly makes any false statement, misrepresentation, concealment of fact or any other act of fraud to obtain compensation as provided under EEOICPA or who knowingly accepts compensation to which that person is not entitled is subject to civil or administrative remedies as well as felony criminal prosecution and may, under appropriate criminal provisions, be punished by a fine or imprisonment or both. I affirm that the information provided on this form is accurate and true.

Send this form to:
SEC Petition
Office of Compensation Analysis and Support
NIOSH
4676 Columbia Parkway, MS-C-47
Cincinnati, OH 45226

If there are additional petitioners, they must complete the Appendix Forms for additional petitioners. The Appendix forms are located at the end of this document.

Name or Social Security Number of First Petitioner: _____

Public Burden Statement

Public reporting burden for this collection of information is estimated to average 300 minutes per response, including time for reviewing instructions, gathering the information needed, and completing the form. If you have any comments regarding the burden estimate or any other aspect of this collection of information, including suggestions for reducing this burden, send them to CDC Reports Clearance Officer, 1600 Clifton Road, MS-E-11, Atlanta GA, 30333; ATTN:PRA 0920-0639. Do not send the completed petition form to this address. Completed petitions are to be submitted to NIOSH at the address provided in these instructions. Persons are not required to respond to the information collected on this form unless it displays a currently valid OMB number.

Privacy Act Advisement

In accordance with the Privacy Act of 1974, as amended (5 U.S.C. § 552a), you are hereby notified of the following:

The Energy Employees Occupational Illness Compensation Program Act (42 U.S.C. §§ 7384-7385) (EEOICPA) authorizes the President to designate additional classes of employees to be included in the Special Exposure Cohort (SEC). EEOICPA authorizes HHS to implement its responsibilities with the assistance of the National Institute for Occupational Safety (NIOSH), an Institute of the Centers for Disease Control and Prevention. Information obtained by NIOSH in connection with petitions for including additional classes of employees in the SEC will be used to evaluate the petition and report findings to the Advisory Board on Radiation and Worker Health and HHS.

Records containing identifiable information become part of an existing NIOSH system of records under the Privacy Act, 09-20-147 "Occupational Health Epidemiological Studies and EEOICPA Program Records. HHS/CDC/NIOSH." These records are treated in a confidential manner, unless otherwise compelled by law. Disclosures that NIOSH may need to make for the processing of your petition or other purposes are listed below.

NIOSH may need to disclose personal identifying information to: (a) the Department of Energy, other federal agencies, other government or private entities and to private sector employers to permit these entities to retrieve records required by NIOSH; (b) identified witnesses as designated by NIOSH so that these individuals can provide information to assist with the evaluation of SEC petitions; (c) contractors assisting NIOSH; (d) collaborating researchers, under certain limited circumstances to conduct further investigations; (e) Federal, state and local agencies for law enforcement purposes; and (f) a Member of Congress or a Congressional staff member in response to a verified inquiry.

This notice applies to all forms and informational requests that you may receive from NIOSH in connection with the evaluation of an SEC petition.

Use of the NIOSH petition forms (A and B) is voluntary but your provision of information required by these forms is mandatory for the consideration of a petition, as specified under 42 CFR Part 83. Petitions that fail to provide required information may not be considered by HHS.

Name or Social Security Number of First Petitioner _____

[redacted]

Special Exposure Cohort Petition
under the Energy Employees Occupational Illness Compensation Act

U.S. Department of Health and Human Services
Centers for Disease Control and Prevention
National Institute for Occupational Safety and Health

OMB Number: 0920-0639 Expires: 05/31/2007

Petitioner Authorization Form

Use of this form is voluntary. Failure to use this form will not result in the denial of any right, benefit,

Instructions:

If you wish to petition HHS to consider adding a class of employees to the Special Exposure Cohort and you are NOT either a member of that class, a survivor of a member of that class, or a labor organization representing or having represented members of that class, then 42 CFR Part 83, Section 83.7(c) requires that you obtain written authorization. You can obtain such authorization from either an employee who is a member of the class or a survivor of such an employee. You may use this form to obtain such authorization and submit the completed form to NIOSH with the related petition. **Please print legibly.**

For Further Information: If you have questions about these instructions, please call the following NIOSH toll-free phone number and request to speak to someone in **the Office of Compensation Analysis and Support** about an SEC petition: **1-800-356-4674.**

Authorization for Individual or Entity to Petition HHS on Behalf of a Class of Employees for Addition to the Special Exposure Cohort

I, _____
Name of Class Member or Survivor

_____
Street Address of Class Member or Survivor Apt. # P.O. Box

_____
City, State, Zip Code of Class Member or Survivor

do hereby authorize:

_____
Name of Petitioner

Address of Petitioner Apt. # P.O. Box

_____
City, State and Zip Code of Petitioner

to petition the Department of Health and Human Services on behalf of a class of employees that includes:

_____
Name of Class Member (employee, not the employee's survivor)

for the addition of the class to the Special Exposure Cohort, under the Energy Employee's Occupational Illness Compensation Program Act (42 U.S.C. §§ 7384-7385).

In providing this authorization, I recognize that the petitioner named above will have all the rights of a petitioner as provided for under 42 CFR Part 83.

_____ 7/15/04
Signature of Class Member or Survivor Date

Name or Social Security Number of First Petitioner: _____

Public Burden Statement

Public reporting burden for this collection of information is estimated to average 3 minutes per response, including time for reviewing instructions, gathering the information needed, and completing the form. If you have any comments regarding the burden estimate or any other aspect of this collection of information, including suggestions for reducing this burden, send them to CDC Reports Clearance Officer, 1600 Clifton Road, MS-E-11, Atlanta GA, 30333; ATTN:PRA 0920-0639. Do not send the completed petition form to this address. Completed petitions are to be submitted to NIOSH at the address provided in these instructions. Persons are not required to respond to the information collected on this form unless it displays a currently valid OMB number.

Use of this form is voluntary. Failure to use this form will not result in the denial of any right, benefit, or privilege to which you may be entitled.

Name or Social Security Number of First Petitioner: _____

SPECIAL EXPOSURE COHORT PETITION

Subsections F.1, F.2 & F.4

Supporting Documentation

ORAU Team NIOSH Dose Reconstruction Project Technical Basis Document: Basis for Development of an Exposure Matrix for Blockson Chemical Company, Joliet, Illinois; Period of Operation: March 1, 1951 through March 31, 1962	Document Number: ORAUT-TKBS-0002 Effective Date: 06/29/2004 Revision No.: 01 Controlled Copy No.: _____ Page 1 of 19
Subject Experts: Cindy W. Bloom Document Owner Approval: Signature on File Date: 06/24/2004 Cindy W. Bloom, TBD Team Leader Approval: Signature on File Date: 06/29/2004 Judson L. Kenoyer, Task 3 Manager Concurrence: Signature on File Date: 06/28/2004 Richard E. Toohey, Project Director Approval: Signature on File Date: 06/29/2004 James W. Neton, OCAS Health Science Administrator	Supersedes: Revision No: 00

TABLE OF CONTENTS

Section — Page

Record of Issue/Revisions 3

1.0 Introduction 4

2.0 Site Description, Operational History, and Process 4

3.0 Estimation of Internal Exposure 6

4.0 Estimation of Radon Exposures 9

5.0 Estimation of External Exposure 10

6.0 Estimation of Exposure to Residual Activity 15

References 17

LIST OF TABLES

Table — Page

1 Calculation of the quantity of U_3O_8 aerosolized per day from the estimated amount of yellowcake produced each year 7
2 Estimation of the daily intake of natural uranium based on source term 7
3 Comparison of Blockson Building 55 uranium air concentrations calculated from urinalysis results and source term estimates to air concentrations measured in uranium mills 9
4 Annual organ doses due to submersion in air contaminated with yellowcake dust 10
5 Annual organ doses due to exposure to ground surface contamination 12
6 Annual organ doses due to exposure to contaminated surfaces 13
7 Results of calculations of the exposure rate from a drum of yellowcake and a drum of UF_4 14
8 Annual organ doses due to exposure to drums of yellowcake 14
9 Annual organ doses due to the assumed annual diagnostic chest x-ray 15
10 Annual organ doses due to external exposure to residual radioactivity 16

LIST OF FIGURES

Figure — Page

1 The Blockson process for the recovery of uranium from phosphoric acid 5
2 Photograph of Building 55 of the Blockson Chemical Company 8
3 Beta dose rate on the surface of yellowcake 11
4 Beta dose rate from yellowcake separated from ore for more than 100 days as a function of distance from the surface 11

1.0 Introduction

Technical Basis Documents and Site Profile Documents are general working documents that provide guidance concerning the preparation of dose reconstructions at particular sites or categories of sites. They will be revised in the event additional relevant information is obtained about the affected site(s). These documents may be used to assist NIOSH in the completion of the individual work required for each dose reconstruction.

In this document the word "facility" is used as a general term for an area, building or group of buildings that served a specific purpose at a site. It does not necessarily connote an "atomic weapons employer facility" or a " Department of Energy facility" as defined in the Energy Employee Occupational Illness Compensation Program Act of 2000 (42 U.S.C. § 7384l (5) and (12)).

2.0 Site Description, Operational History, and Process

In 1950-1951, the U.S. Atomic Energy Commission (AEC) approached several phosphate rock consumers about the possibility of recovering the uranium from the phosphate rock they processed. At the Blockson Chemical Company plant, the AEC was interested in the uranium that could be separated from the phosphoric acid, so in early 1951, the research staff at Blockson began an evaluation of the available research data and preliminary experimentation that the AEC made available to them. They determined that the only economically feasible approach applicable to the Blockson process would be to make the uranium recovery a by-product process (Stolz, Jr. 1958).

In 1951, the AEC signed a letter contract with the Blockson Chemical Company (contract number AT(49-1)-606) to develop a process to extract uranium from wet phosphoric acid (US DOE 1985, US DOE 2002). The Blockson research staff began the research and it was eventually determined that by controlling pH and reducing conditions, the uranium could be precipitated from the phosphoric acid. After an economic evaluation of the process, a pilot plant was constructed to further test and refine the process. Meanwhile, laboratory investigations continued on another possible method of precipitating the uranium from the phosphoric acid. This method involved using chlorine as an oxidizing agent and then adding sodium hydrosulfite to cause precipitation. This process was much more successful and economical, so the pilot plant was shut down and converted. Then work began to upgrade the process, and a recovery plant was designed and constructed.

The letter contract was later replaced by another contract (contract number AT(49-1)-611) that was signed October 15, 1951. Under this second contract, Blockson constructed, at its own expense, a facility (Building 55) to house uranium recovery equipment at their plant in Joliet, Illinois. The AEC furnished and installed the uranium recovery equipment (US DOE 1985). On August 15, 1952, Blockson began production and delivery of uranium concentrates to the AEC (Stolz, Jr. 1958). According to the contract, production was limited to not more than 50,000 pounds of uranium per year (US DOE 1983, US DOE 1985).

In 1955, Blockson was sold to the Olin Mathieson Chemical Corporation who assumed the liabilities and obligations of Blockson under all contracts, as stated in contract number AT(49-1)-611 Amendment 1. The Olin Corporation continued the uranium recovery program under contract with the AEC. The actual amount of uranium produced for the AEC is not known. However, according to the contract, the amount of uranium produced was limited to not more than 50,000 pounds per year. In March 1962, the uranium recovery work was discontinued with the expiration of the contract (US DOE 1985).

According to the contract signed in October of 1951, Blockson, and later Olin Mathieson, was responsible for the health and safety of the employees at the site and for conforming to AEC health and safety regulations and requirements. In Amendment 3, effective January 1, 1958, this statement was deleted. Personnel with the Formerly Utilized Sites Remedial Action Program (FUSRAP) conducted records searches for information regarding the uranium recovery activities at Blockson. No records of health and safety inspections by the AEC were found as a result of their search, although there was evidence of periodic visits by AEC personnel to review and audit process operations (US DOE 1985).

The recovery plant was put into operation on August 15, 1952, approximately 17 months after research on the process was begun. The process was patented and the patent, USP 2743156, was assigned to the AEC (Stolz, Jr. 1958). A one-story, 100-by-175-foot building was built specifically to house the uranium recovery process (US DOE 1983, US DOE 1985). The recovery plant was designed to be capable of recovering uranium from 1500 tons of phosphate daily (Stolz, Jr. 1958). Figure 1 shows the schematic flowchart of the Blockson process for the recovery of uranium from wet phosphoric acid.

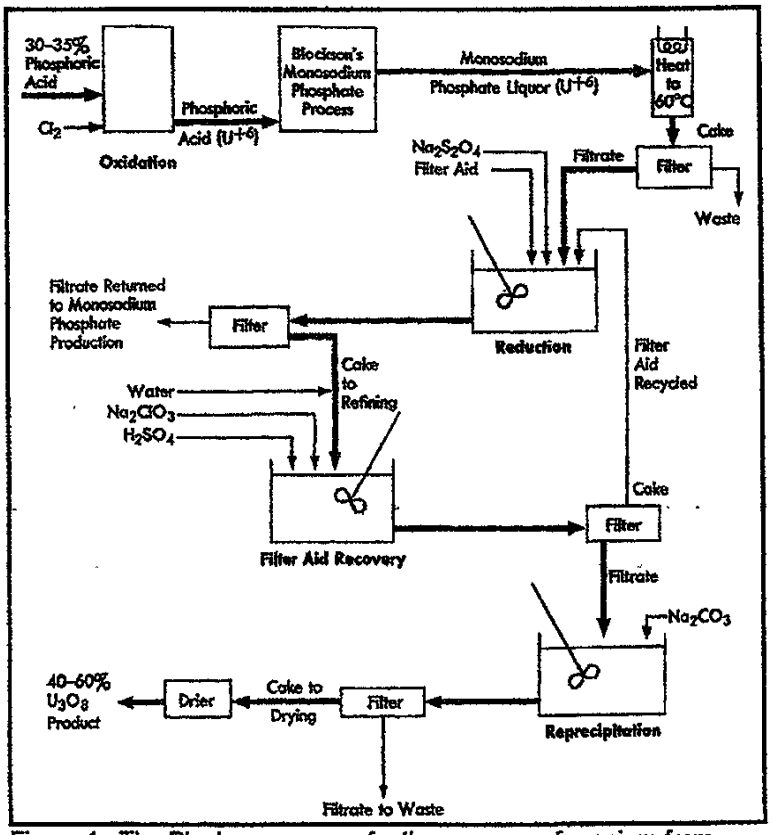

Figure 1. The Blockson process for the recovery of uranium from phosphoric acid. [Reproduced from Clegg and Foley 1958].

The Blockson Chemical Company manufactured wet-process phosphoric acid from Florida phosphate rock (Barr et al. 1955, Clegg and Foley 1958). The Blockson plant produced technical phosphates rather than fertilizers from wet phosphoric acid (Wilkinson 1976). In the process, the phosphate rock

is calcined and then digested with sulfuric acid resulting in phosphogypsum and phosphoric acid. The phosphogypsum partitions most of the calcium and radium, and the phosphoric acid partitions around 90% of the uranium. Very little uranium is lost to the phosphogypsum. The phosphoric acid is then converted into monosodium phosphate and other phosphorus derivatives. The uranium by-product is precipitated from the monosodium phosphate stream. The monosodium phosphate liquor is heated and clarified. Sodium hydrosulfite ($Na_2S_2O_4$) is added to precipitate the uranium. The liquor is filtered and the filtrate is returned to the phosphate-processing plant. The precipitate, containing about 5% U_3O_8 is slurried in water in an upgrading step in which the uranium is redissolved. The uranium is then reprecipitated as sodium uranous phosphate. The slurry is filtered and the precipitate, known as yellowcake and containing 40 to 60% U_3O_8, is dried for shipping (Clegg and Foley 1958, McGinley 2002, Wimpfen 2002). The uranium content of the phosphate rock consumed in these processes averaged about 0.014% U_3O_8 (Stolz, Jr. 1958).

3.0 Estimation of Internal Exposure

The greatest potential for internal exposure associated with the uranium recovery process arises in the final packing areas. Here the essentially pure uranium compound is dried and barreled for shipping resulting in a potentially dusty operation (Eidson and Damon 1984, US NRC 2002b, Wimpfen 2002). In all other areas of the plant, wet processes are used and the surface contamination and dust exposures are minimal (Clegg and Foley 1958, US NRC 2002b).

A study was done (Eidson and Damon 1984) of uranium aerosols generated during yellowcake packaging operations at four uranium mills. The study described a sequence of steps common to all four uranium mills:

1. No activity. This is when the plant is shut down for maintenance or all available yellowcake was packaged during a previous shift. Workers are generally not present during this step.

2. Drum loading. This occurs when a drum is placed under a hopper containing the dried yellowcake. The yellowcake is allowed to fall into the drum. The amount of time workers spend in this area varies as it depends on the size of the yellowcake inventory in the hopper. (It is not clear whether or not a hopper was used at the Blockson Chemical facility.)

3. Drum uncovering. This step occurs when a filled drum is removed from beneath the hopper. In some cases, the drum may be vibrated to compact the yellowcake before uncovering.

4. Powder sampling. This occurs when a worker takes a sample of yellowcake to analyze for moisture content.

5. Lid sealing. This occurs when a worker places a lid on the drum and seals it.

6. Other activities. This step includes maintenance and hosing area and equipment with water to clean. Hosing the packaging area to clean is a routine operation at uranium mills.

During the study, aerosol samples were taken in yellowcake packaging areas before, during, and after drums of yellowcake were filled and sealed. Median aerosol concentrations during the study ranged from 40 to 340 $\mu g\ U/m^3$. Results from analysis of the air samples showed that appreciable amounts of airborne uranium would be expected to deposit in the nasopharyngeal region of the respiratory tract if inhaled by a worker not wearing respiratory protection (Eidson and Damon 1984).

In order to estimate worker exposure at the Blockson uranium recovery facility, the total amount of U_3O_8 produced from 1952 to 1962 was estimated. A report showed that by the end of 1955, Blockson produced 1,221,470 pounds of uranium concentrate (US DOE 1985), which is roughly 600 pounds of U_3O_8 per day assuming a U_3O_8 concentration of 60%. However, the Blockson process was designed to process only 1500 tons of phosphate daily, which is approximately 400 pounds of U_3O_8 per day. Another document indicates that production was limited by contract to not more than 50,000 pounds of U_3O_8 per year (US DOE 1983). Production was stopped in March 1962 (US DOE 1985). To estimate the source term, it was assumed that production was limited by contract to 50,000 pounds of U_3O_8 per year. Assuming the same rate of production in 1952 and 1962 as in 1953 through 1961, the amount of U_3O_8 produced is estimated at 18,900 and 12,300 pounds in 1952 and 1962, respectively. These annual estimated production values were used to calculate the amount of U_3O_8 produced per day shown in Table 1.

Thus, the estimated total amount of U_3O_8 produced at Blockson from 1952 to 1962 was 480,000 pounds, which is approximately 800,000 to1,200,000 pounds of uranium concentrate (for a U_3O_8 concentration of 60 to 40%, respectively).

Table 1. Calculation of the quantity of U_3O_8 aerosolized per day from the estimated amount of yellowcake produced each year.

Work year	Number of days operated per year	Pounds of U_3O_8 produced annually (lbs)	Pounds of U_3O_8 produced per day (lbs/day)	Quantity of U_3O_8 aerosolized per day (lbs/day)
8/15/1952-12/31/1952	138	18,900	137	1.32E-04
1953-1961	365	50,000	137	1.32E-04
1/1/1962-3/31/1962	90	12,300	137	1.32E-04

Table 2 shows the quantities used to calculate the daily intake by inhalation of natural uranium based on the estimated source term. The daily concentration of uranium in the air at the Blockson plant was calculated by assuming that 9.6E-07 (US NRC 2002c) of the U_3O_8 produced per day was aerosolized. This value was divided by the estimated interior volume of Building 55. The volume of the building was estimated by using the reported dimensions of 100-by-175 feet (US DOE 1983). Although Building 55 was reported to be a one-story building (US DOE 1985), drawings of the building that were used to show radiological survey locations indicate that there were four levels. The first level contained a loading dock and storage room, the second level contained change rooms and a lab, the third where there was a soundproof booth, and the fourth level which consisted of catwalks that allowed access to various parts of the process equipment (US DOE 1983). The interior height of the building was assumed to be 30 feet: 8 feet for each of the first two levels and 7 feet each for the third and fourth levels. Based on the radiological survey report (US DOE 1983) and the photograph shown below in Figure 2, this is a reasonable assumption. The estimated volume of the building was reduced by 10% to account for equipment displacement. This gives an estimate of 13,400 m^3 for the interior volume of Building 55.

Table 2. Estimation of the daily intake of natural uranium based on source term.

Quantity of natural U in air per day (µg)	Natural U air concentration per day (µg/m^3)	Activity of air concentration (pCi/m^3)	Breathing rate (m^3/h)	Daily intake (pCi/d)
5.1E+04	3.8	2.6	1.2	25

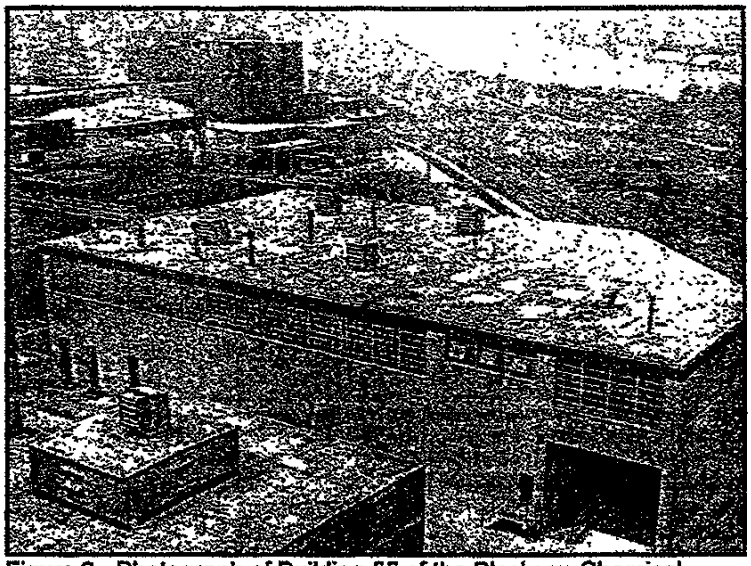

Figure 2. Photograph of Building 55 of the Blockson Chemical Company. [Reproduced from Barr et al. 1955].

The daily air concentration of uranium activity was multiplied by the breathing rate for adult light workers to obtain an estimated intake of 25 pCi per day of natural uranium due to inhalation. The breathing rate was calculated from the volume of air breathed by an adult light worker shown in Table 6 on pg. 23 of ICRP Publication 66 (ICRP 1994). The light worker category assumes an activity of 1/3 sitting and 2/3 light exercise.

Although no air monitoring data were found for the Blockson facility, urinalysis data for 25 workers were found for the period between 4/20/1954 and 2/20/1958. Urine samples were received by the AEC on 10 different dates. The number of samples that were analyzed for each worker varied from 1 to 10 with values ranging between 0.000 to 0.017 mg/L. The Health and Safety Division of the AEC New York Operation Office performed the analyses. The method of analysis was the fluorometric method, which had a detection limit during that time period of 0.0038 mg/L (Wilson 1958). These data were used to fit intakes for each of the workers assuming a relative error of 30%. A chronic inhalation intake from 08/15/1952 to 03/31/1962 was assumed for each worker. The material was assumed to be Absorption Type M (ICRP 1995) and ICRP 66 default parameters were used to calculate intakes. The resulting calculated chronic intake rates were lognormally distributed with a median of 24 pCi/d and a geometric standard deviation of 1.6.

The calculated chronic intake rate of 24 pCi/d is used to estimate internal organ dose for workers with no monitoring records. The annual dose for the organ of interest should be calculated assuming exposure to a natural uranium mixture. The start and end dates for the chronic intake should encompass the period of time the employee worked during the potential exposure period. This period would normally be considered to begin with the recovery plant startup in August 1952, and end when uranium recovery operations ceased. However, to be claimant favorable, the exposure period is assumed to begin when research on the process began, or about 17 months prior to the recovery plant startup in August 1952. Thus, the covered period is assumed to be from March 1, 1951 through March 31, 1962. The annual organ doses can then be entered into the NIOSH IREP program as the annual dose due to chronic exposure to alpha radiation using a lognormal distribution with a geometric standard deviation (GSD) of 1.6.

Considerable variation in the behavior of U_3O_8 has been observed with some studies indicating Absorption Type M and other studies indicating Absorption Type S. The ICRP in Publication 71 recommends the use of Absorption Type M in the absence of specific information (ICRP 1995). The application of Absorption Type M in intake calculations using urinalysis data resulted in a daily intake value consistent with the value estimated from the source term. The ICRP Publication 66 (ICRP 1994) default values should be used for the deposition parameters.

While uranium milling is specifically excluded from the statutory definition of "atomic weapons employer facility," it is interesting to compare the measured uranium air concentrations obtained in the Eidson and Damon (1984) study with the air concentrations calculated for Building 55 from urinalysis data and source term estimates. Note that the U_3O_8 production rate at Blockson was significantly lower than the production rates at the uranium mills in the study. Production rates at uranium mills average around 4000 pounds of U_3O_8 per day (Eisenbud 1987, US DOE 1997). The Blockson process was designed to produce only about 400 pounds of U_3O_8 per day (Stolz, Jr. 1958), which is only about 10% of the average production capacity of mills. In the uranium mill study, aerosol samples were taken in yellowcake packaging areas before, during, and after drums of yellowcake were filled and sealed. Four drums (containing approximately 1000 pounds of yellowcake) were loaded in succession and sealed. Powder samples were taken from each before they were sealed and aerosols generated by yellowcake sampling were sampled. An additional set of aerosol samples were taken during the drum-sealing step. To obtain aerosol samples during the drum-loading step, two of the mills loaded more than one drum simultaneously but at different rates. Thus, assuming there is a direct relationship between U_3O_8 production rate and uranium air concentration, it is possible to make a rough comparison. Table 3 compares the uranium air concentration in Building 55 to uranium air concentrations measured during the uranium mills study.

Table 3. Comparison of Blockson Building 55 uranium air concentrations calculated from urinalysis results and source term estimates to air concentrations measured in uranium mills.

	Estimated intake rate (pCi/day)	Uranium air concentration (pCi/m^3)	Uranium air concentration (µg U/m^3)
From urinalysis results	24	2.5	3.6
From source term estimates	25	2.6	3.8
Uranium mills study (Eidson and Damon 1984)			40-340
Uranium mills study (reduced by a factor of 10 to compare to Blockson design rates)			4-34
Uranium mills study (reduced by a factor of 25 to compare to estimated Blockson production rates)			1.6-14

Ingestion intakes were estimated using guidance provided by NIOSH/OCAS (NIOSH 2004). The amount of uranium ingested daily is based on the average activity air concentration and is estimated to be 0.49 pCi/d, resulting in an annual ingestion intake of 123 pCi. The annual ingestion of 123 pCi per year from March 1951 to March 1962 results in an annual dose to the most exposed organ (bone surfaces) of less than 1 mrem and is therefore not included in this dose reconstruction.

4.0 Estimation of Radon Exposures

Reserved

5.0 Estimation of External Exposure

The primary radionuclides of interest for potential external exposure in Building 55 are U-238 and daughter radionuclides Th-234 and Pa-234m. The uranium recovery process at Blockson was a by-product process that was designed to fit into the already existent phosphate process (Stolz, Jr. 1958). At the Blockson facility, a side-stream of the phosphoric acid was diverted to Building 55 where the uranium was separated (Wimpfen 2002). This phosphoric acid was an intermediate product in Blockson's normal commercial production of technical phosphates (US DOE 1983). In the manufacture of this phosphoric acid, phosphate rock is digested with sulfuric acid resulting in phosphoric acid and phosphogypsum. The uranium remains with the phosphoric acid and the radium preferentially follows the phosphogypsum (Roessler et al. 1979, Laiche and Scott 1991). Therefore, the potential radium exposure was due to the commercial operation already in progress at Blockson and not due to the AEC-related work. A radiological survey of Building 55 that was done in 1978 showed that contamination within the building was primarily uranium (US DOE 1983).

For the purpose of dose reconstruction, it is assumed that there was a potential for external exposure from four sources: submersion in air contaminated with yellowcake dust, exposure from contaminated surfaces, exposure from contaminated skin, and exposure to drums of yellowcake.

For estimating external exposure due to submersion in air contaminated with yellowcake dust, the estimated air concentration values (Table 3, from urinalysis results) and an assumed 2000-hr work year were combined with dose coefficients for U-238 and daughter radionuclides Th-234 and Pa-234m from Federal Guidance Report No. 12 (US EPA 1993). Table 4 shows external annual organ dose estimates due to submersion of workers in air contaminated with yellowcake dust. The cumulative dose from 1951 through 1962 is less than 1 mrem and is therefore not included in the dose estimation.

Table 4. Annual organ doses due to submersion in air contaminated with yellowcake dust.

Organ	Annual organ dose (rem)
Adrenal	5.17E-08
U bladder	5.32E-08
Bone surface	1.55E-07
Brain	6.73E-08
Breast	7.97E-08
Esophagus	5.06E-08
Stomach wall	5.71E-08
Small intestine	4.98E-08
Upper large intestine wall	5.21E-08
Lower large intestine wall	5.07E-08
Kidney	5.83E-08
Liver	5.80E-08
Lung	6.53E-08
Muscle	6.46E-08
Ovaries	4.95E-08
Pancreas	4.88E-08
Red bone marrow	6.03E-08
Skin	3.64E-06
Spleen	5.81E-08
Testes	6.86E-08
Thymus	6.15E-08
Thyroid	6.85E-08
Uterus	4.84E-08

Clegg and Foley (1958) state that freshly separated yellowcake has a very low gamma emission rate; therefore, external radiation is of no particular concern at this stage of the process. However, due to ingrowth of daughter radionuclides in the yellowcake, the radiation levels increase for several months following production (US NRC 2002b).

For accumulations of processed yellowcake dust, the surface beta dose rate from U-238 daughters is negligible just after separation, but rises steadily until Pa-234m and Th-234 reach equilibrium concentrations. After a few months, the beta surface dose rate is about 150 mrem/hr (US NRC 2002b). Figure 3 shows the rise in beta dose rate during 100 days after separation from ore.

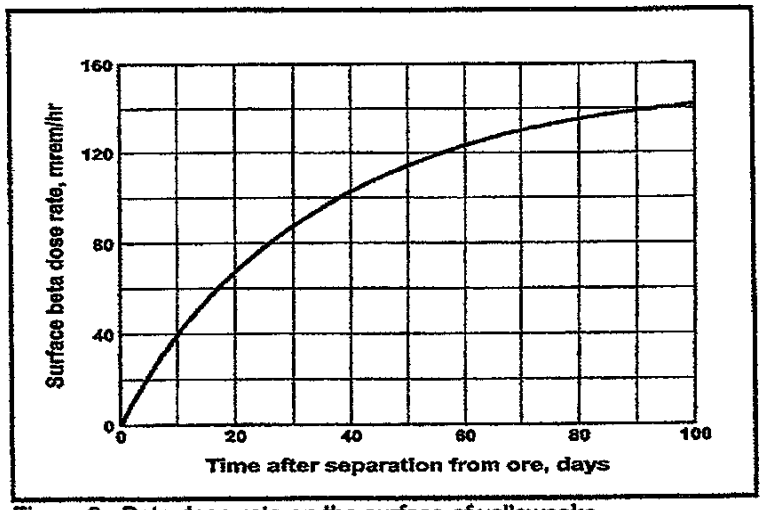

Figure 3. Beta dose rate on the surface of yellowcake. [Reproduced from US NRC 2002b]

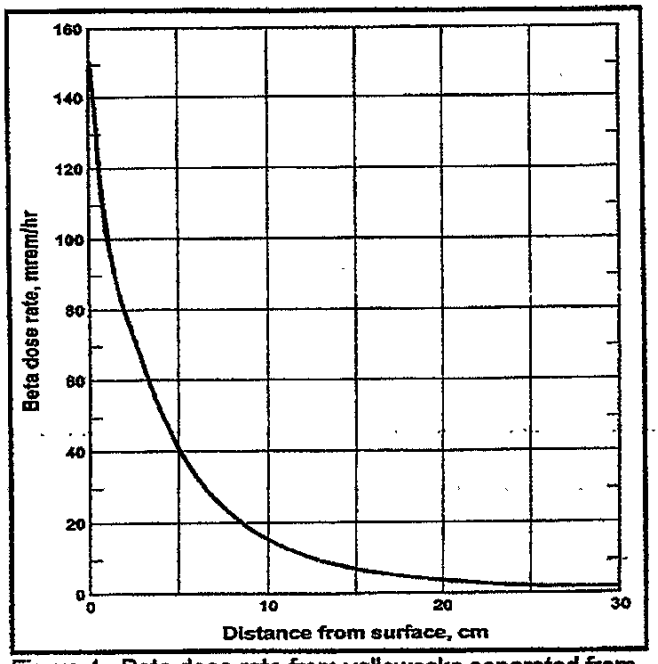

Figure 4. Beta dose rate from yellowcake separated from ore for more than 100 days as a function of distance from the surface. [Reproduced from US NRC 2002b]

Figure 4 above shows that the beta dose rate from the surface of yellowcake decreases rapidly as a function of distance from the surface. The rapid decrease in the beta dose rate with distance, and the shielding afforded by shoes and clothing, reduces dose from electron exposure, particularly from yellowcake deposited on floors.

The most likely possibility of external exposure from surface contamination was assumed to occur in the yellowcake packaging area. Because the AEC had strict material accountability procedures, the accumulation of process material was likely controlled. However, to be claimant favorable, it was assumed that a certain amount of yellowcake was allowed to build up between cleanings.

To estimate the quantity of yellowcake contamination on surfaces, the air concentration determined from urinalysis results was multiplied by the indoor deposition velocity and the assumed deposition time. The indoor deposition velocity is dependent on the physical properties of the room (air viscosity and density, turbulence, thermal gradients, surface geometry) and the particles (diameter, shape, density). Because these characteristics are unknown, the terminal settling velocity was calculated for an aerosol with the ICRP 66 default particle size of 5 μm activity mean aerodynamic diameter (AMAD) (ICRP 1994). The calculated terminal settling velocity of 0.00075 m/s was used as an estimate of the velocity of deposition to surfaces in the building. This value is within the range of deposition velocities (2.7E-06 to 2.7E-03 m/s) measured in various studies (US NRC 2002a) and is considered claimant-favorable. Also, room air exchange rates, ventilation, and plant housekeeping practices are unknown so it was assumed that there was a steady state air concentration and that surface contamination was the result of 365 days (1 year) of settling.

The estimated surface contamination is multiplied by the dose coefficients for U-238 and daughter radionuclides Th-234 and Pa-234m for contaminated ground surface from Federal Guidance Report No. 12 (US EPA 1993). Table 5 shows maximum external dose estimates due to exposure to ground surface contamination.

Table 5. Annual organ doses due to exposure to ground surface contamination. Bold italics indicate annual dose greater than 1 mrem.

Organ	Annual dose (rem)
Adrenal	1.2E-05
U bladder	1.3E-05
Bone surface	3.3E-05
Brain	1.2E-05
Breast	1.6E-05
Esophagus	1.1E-05
Stomach wall	1.3E-05
Small intestine	1.2E-05
Upper large intestine wall	1.2E-05
Lower large intestine wall	1.2E-05
Kidney	1.3E-05
Liver	1.3E-05
Lung	1.3E-05
Muscle	1.6E-05
Ovaries	1.2E-05
Pancreas	1.1E-05
Red bone marrow	1.3E-05
Skin	***5.9E-03***
Spleen	1.3E-05
Testes	1.6E-05
Thymus	1.3E-05
Thyroid	1.4E-05
Uterus	1.2E-05

With the exception of dose to the skin, the annual organ dose for each of the organs is less than 1 mrem. These values are significantly lower than some of the exposure rates measured in a 1978 survey (US DOE 1983). According to this survey, the median external exposure rate at 1 meter was 0.03 mR/h with a maximum of 0.3 mR/h. Therefore, to estimate potential external exposure to contaminated surfaces in the plant, the median exposure rate was multiplied by the Exposure (R) to Organ Dose (rem) photon dose conversion factors from Appendix B of the NIOSH External Dose Reconstruction Implementation Guideline (NIOSH 2002). The exposure geometry was assumed to be isotropic and the exposure rate was divided evenly between the conversion factors for photons with energy between 30 and 250 keV and photons with energy greater than 250 keV. Table 6 shows the calculated annual organ doses from exposure to contaminated surfaces during plant operations.

The organ doses in the second and third columns of Table 6 are entered into the NIOSH IREP program assuming a chronic exposure and a lognormal distribution with a GSD of 4.0. The organ doses in the second column are attributed to photons with E=30-250 keV and the organ doses in the third column are attributed to photons with E>250 keV.

Table 6. Annual organ doses due to exposure to contaminated surfaces.

Organ	Annual organ dose (rem)		
	Photons E=30-250 keV	Photons E>250 keV	Total
Bladder	1.61E-02	1.94E-02	3.55E-02
Red bone marrow	1.67E-02	2.00E-02	3.67E-02
Bone surface	2.81E-02	2.04E-02	4.86E-02
Breast	2.12E-02	2.22E-02	4.35E-02
Colon	1.55E-02	1.90E-02	3.45E-02
Esophagus	1.50E-02	1.96E-02	3.46E-02
Eye	2.23E-02	2.28E-02	4.50E-02
Ovaries	1.48E-02	1.88E-02	3.36E-02
Testes	1.90E-02	2.08E-02	3.98E-02
Liver	1.70E-02	2.00E-02	3.70E-02
Lung	1.88E-02	2.12E-02	3.99E-02
Remainder organs	1.67E-02	1.99E-02	3.65E-02
Skin	2.19E-02	2.28E-02	4.47E-02
Stomach	1.70E-02	1.99E-02	3.69E-02
Thymus	1.84E-02	2.05E-02	3.89E-02
Thyroid	1.92E-02	2.14E-02	4.06E-02
Uterus	1.46E-02	1.81E-02	3.27E-02

It was also assumed that there was a potential to receive a shallow dose from electrons due to skin contaminated with yellowcake. The amount of skin contamination was calculated by using a measured deposition velocity for 4-μm particles to skin of 0.012 m/s (Andersson et al. 2002, Fogh et al. 1999). For simplification, it was assumed that the material deposited on the skin during an 8-hour period was deposited at the beginning of the shift. Several claimant interviews indicated that workers took showers as part of their contamination control program, so it was assumed that the worker took a shower at the end of the shift. The estimated amount of skin contamination was combined with electron dose-rate conversion factors for U-238 and daughter radionuclides Th-234 and Pa-234m for skin in contact with radionuclides (Kocher and Eckerman 1987). The worker was assumed to receive exposure from skin contamination only during the hours worked. Based on these assumptions, the annual dose to the skin due to electron exposure from skin contaminated with yellowcake is estimated to be 0.0018 rem. However, this skin dose is negligible compared to the shallow dose estimated from exposure to a drum of aged yellowcake. This scenario is described next.

There was also the potential for exposure to drums of yellowcake during drum loading, sealing and sampling, and moving the drums to storage. It was assumed that 50 drums of yellowcake were loaded and packed each year (1000 pounds per drum, 50,000 pounds per year). MicroShield© (Grove Engineering 2003) and MCNP (LANL 2003) calculations were done to estimate the exposure to a drum of yellowcake at the surface of the drum, at 30 cm (1 ft), and at 1 m. Also, NIOSH/OCAS provided results of survey measurements of partially filled drums of UF_4 at the DOE facility at Fernald. Measurements were taken at the sides of the drum at the center and bottom. The mean measurements for the center and the bottom of the drum were averaged together to get a dose rate of 1.3 mrem/h at the surface. To get an estimate of the dose rate at 1 foot from the UF_4 drums, the surface dose rate was divided by the average ratio of the surface to 1 foot calculated dose rates obtained with MicroShield and MCNP. Table 7 shows the results of the calculations for the yellowcake drums and the UF_4 drums.

Table 7. Results of calculations of the exposure rate from a drum of yellowcake and a drum of UF_4.

	Surface (side)	Exposure rate 30 cm (1 ft)	1 m
MicroShield (mR/h)	5.5E-01	8.4E-02	2.2E-02
MCNP (mrem/h)	5.6E-01	1.3E-01	3.6E-02
UF_4 (mrem/h)	1.3E+00	2.4E-01	

The UF_4 values were larger and, to be conservative, were used to estimate the annual dose. During an interview, a claimant stated that he spent 8 hours per day, 1 or 2 days per week loading drums onto trucks and boxcars. Thus, to be claimant favorable in estimating the most likely annual dose, it was assumed the worker was 1 foot from the drum of UF_4 for 8 hours per day, 1 day per week, and 50 weeks per year. It was assumed that the amount of time spent loading barrels was lognormally distributed, and the assumption that the worker was exposed 40 hours per week for 50 weeks per year was considered to be the upper 95th percentile. Thus, the annual dose due to exposure to drums of UF_4 (analog for yellowcake) was calculated to be 0.096 rem.

The organ doses were calculated by multiplying the estimated annual dose of 0.096 rem by the "Ambient Dose Equivalent (H*(10)) to Organ Dose (H_T)" photon dose conversion factors found in Appendix B of the NIOSH External Dose Reconstruction Implementation Guideline (NIOSH 2002). The exposure geometry was assumed to be anterior-posterior (AP) and the dose rate was divided equally between photons with E=30-250 keV and photons with E>250 keV. Table 8 below shows the annual organ doses due to the potential exposure to drums of yellowcake.

Table 8. Annual organ doses due to exposure to drums of yellowcake.

Organ	Annual organ dose (rem)		
	Photons E=30-250 keV	Photons E>250 keV	Total
Bladder	4.51E-02	4.37E-02	8.88E-02
Red bone marrow	2.30E-02	3.58E-02	5.88E-02
Bone surface	4.39E-02	3.80E-02	8.19E-02
Breast	4.61E-02	4.64E-02	9.24E-02
Colon	3.85E-02	4.19E-02	8.04E-02
Esophagus	2.51E-02	3.70E-02	6.21E-02
Eye	4.54E-02	4.36E-02	8.89E-02
Ovaries	3.48E-02	4.07E-02	7.56E-02
Testes	5.23E-02	4.68E-02	9.91E-02
Liver	3.86E-02	4.24E-02	8.11E-02
Lung	3.60E-02	4.16E-02	7.75E-02
Remainder organs	3.21E-02	3.91E-02	7.11E-02
Skin	3.25E-02	4.14E-02	7.39E-02
Stomach	4.56E-02	4.40E-02	8.96E-02
Thymus	5.11E-02	4.43E-02	9.54E-02
Thyroid	5.24E-02	4.82E-02	1.01E-01
Uterus	3.67E-02	3.89E-02	7.56E-02

The organ doses in the second and third columns of Table 8 are entered into the NIOSH IREP program assuming a chronic exposure and a lognormal distribution with a GSD of 2.7. The organ doses in the second column are attributed to photons with E=30-250 keV and the organ doses in the third column are attributed to photons with E>250 keV.

It was assumed that there was a potential to receive a shallow dose from exposure to open drums during drum loading and sealing. According to Figure 4, the dose rate at 1 foot from the surface of aged yellowcake is between 1 and 2 mrem/h. Therefore, to be claimant-favorable, it was assumed that the claimant spent 8 hours per week, 50 weeks per year at 1 foot from the surface of aged yellowcake at a dose rate of 2 mrem/h. Again, the time of exposure was assumed to be lognormally distributed and an exposure time of 40 hours per week, 50 weeks per year was assumed to be the 95th percentile. Thus, the annual shallow dose from exposure to open drums of yellowcake is assumed to be 0.8 rem per year with a GSD of 2.7.

The assumption was also made that workers received an annual occupationally related diagnostic x-ray. The exposure geometry was assumed to be posterior-anterior (PA) (NIOSH 2002). Table 9 below shows the annual organ doses due to the assumed annual diagnostic chest x-ray (Kathren et al. 2003). The values in Table 9 are entered into the NIOSH-IREP program as the annual dose due to an acute exposure to photons (E=30-250 keV). The distribution is assumed to be normal with a standard deviation of 30%.

Table 9. Annual organ doses due to the assumed annual diagnostic chest x-ray.

Organ	Annual dose (rem)
Thyroid	3.48E-02
Eye/brain	6.40E-03
Ovaries	2.5E-02
Liver/gall bladder/spleen	9.02E-02
Urinary bladder	2.5E-02
Colon/rectum	2.5E-02
Testes	5.0E-03
Lungs (male)	8.38E-02
Lungs (female)	9.02E-02
Thymus	9.02E-02
Esophagus	9.02E-02
Stomach	9.02E-02
Bone surfaces	9.02E-02
Remainder	9.02E-02
Breast	9.80E-03
Uterus (contents)	2.5E-02
Bone marrow (male)	1.84E-02
Bone marrow (female)	1.72E-02
Skin	2.70E-01

6.0 Estimation of Exposure to Residual Activity

After conclusion of the AEC activities in Building 55 in March of 1962, the building continued to be used for chemical processing and production of phosphate products from phosphate rock (US DOE 1983). Prior to the 1978 survey by Argonne National Laboratory, there were no records of any radiological surveys or decontamination activities at the site. The results of the 1978 survey showed that thirty-three localized areas and three larger general areas exceeded allowable limits for uranium and radium-226. In 15 of those locations, contamination was determined to be removable and available for transfer to other areas. Thus, dose due to exposure to residual activity is estimated for the purpose of dose reconstruction.

According to this survey, the median external exposure rate at 1 meter was 0.03 mR/h with a maximum of 0.3 mR/h. Therefore, to estimate potential external exposure to contaminated surfaces in the plant, the median exposure rate was multiplied by the Exposure (R) to Organ Dose (rem) photon dose conversion factors from Appendix B of the NIOSH External Dose Reconstruction Implementation Guideline (NIOSH 2002). The exposure geometry was assumed to be isotropic and the exposure rate was divided evenly between the conversion factors for photons with energy between 30 and 250 keV and photons with energy greater than 250 keV. Table 10 shows the calculated annual organ doses from external exposure to residual radioactivity after the end of AEC operations at the site.

The organ doses in the second and third columns of Table 10 are entered into the NIOSH IREP program assuming a chronic exposure and a lognormal distribution with a GSD of 4.0. The organ doses in the second column are attributed to photons with E=30-250 keV and the organ doses in the third column are attributed to photons with E>250 keV. The residual contamination exposure period is assumed to begin on April 1, 1962 and end on the employee's last day of work in Building 55.

The maximum internal exposure from residual radioactivity was estimated by assuming that the facility was uniformly contaminated at the level of maximum smear result (considered removable

Table 10. Annual organ doses due to external exposure to residual radioactivity.

Organ	Annual organ dose (rem)		
	Photons E=30-250 keV	Photons E>250 keV	Total
Bladder	1.61E-02	1.94E-02	3.55E-02
Red bone marrow	1.67E-02	2.00E-02	3.67E-02
Bone surface	2.81E-02	2.04E-02	4.86E-02
Breast	2.12E-02	2.22E-02	4.35E-02
Colon	1.55E-02	1.90E-02	3.45E-02
Esophagus	1.50E-02	1.96E-02	3.46E-02
Eye	2.23E-02	2.28E-02	4.50E-02
Ovaries	1.48E-02	1.88E-02	3.36E-02
Testes	1.90E-02	2.08E-02	3.98E-02
Liver	1.70E-02	2.00E-02	3.70E-02
Lung	1.88E-02	2.12E-02	3.99E-02
Remainder organs	1.67E-02	1.99E-02	3.65E-02
Skin	2.19E-02	2.28E-02	4.47E-02
Stomach	1.70E-02	1.99E-02	3.69E-02
Thymus	1.84E-02	2.05E-02	3.89E-02
Thyroid	1.92E-02	2.14E-02	4.06E-02
Uterus	1.46E-02	1.81E-02	3.27E-02

contamination) of 640 dpm/100 cm^2. This value was multiplied by a resuspension factor of 1E-06 m^{-1} (US NRC 2002c). This resulted in an estimated maximum residual air concentration of 0.03 pCi/m^3. Assuming a breathing rate of 1.2 m^3/h and a 2000-h work year results in a possible annual inhalation intake of 71 pCi. This value is considered negligible as it results in an annual dose of less than 10 mrem to the maximally exposed organ and is not included in the dose reconstruction.

REFERENCES

Andersson, K.G., Fogh, C.L., Byrne, M.A., Roed, J., Goddard, A.J.H., Hotchkiss, S.A.M., "Radiation dose implications of airborne contaminant deposition to humans," *Health Physics*, 82(2), pp. 226-232, 2002

Barr, J.A., Jr., Ruch, J.W., and Borlik, R.F., "Recovering Uranium As By-Product in Phosphate Processing," presented before the annual meeting of the American Chemical Society, Chicago and reprinted from Rock Products, October 1955

Brodsky, A., "Resuspension Factors and Probabilities of Intake of Material in Process (Or 'Is 10-6 a Magic Number in Health Physics?')," *Health Physics*, 39(6): 992-1000, 1980

Clegg, J.W., and Foley, D.D., "Uranium Ore Processing," prepared under contract with the U.S. AEC, Addison-Wesley Publishing Company, Inc., 1958

Eidson, A.F., and Damon, E.G., "Predicted Deposition Rates of Uranium Yellowcake Aerosols Sampled in Uranium Mills," *Health Physics*, 46(1): 165-176, 1984

Eisenbud, M., Blatz, H., and Barry, E.V., "How Important is Surface Contamination?" *Nucleonics*, Vol. 12 (8), p. 12, August 1954

Eisenbud, M., Environmental Radioactivity from Natural, Industrial, and Military Sources, Third Edition, Academic Press, Inc., San Diego, CA 1987

Fogh, C.L., Byrne, M.A., Andersson, K.G., Bell, K.F., Roed, J., Goddard, A.J.H., Vollmair, D.V., Hotchkiss, S.A.M., Quantitative measurement of aerosol deposition on skin, hair and clothing for dosimetric assessment—final report, Roskilde, Denmark: Risø National Laboratory, Risø-R-1075(EN), 1999

Frey, H.C., and Cullen, A.C., "Distribution Development for Probabilistic Exposure Assessment," Paper No. 95-94.02, Proceedings of the 88th Annual Meeting of the Air & Waste Management Association, San Antonio, Texas, June 18-23, 1995

Grove Engineering, MicroShield Version 6.02, 2003

Kathren, R.L., Shockley, V.E., Thomas, E.M., Taulbee, T.D., Technical Information Bulletin: Dose Reconstruction from Occupationally Related Diagnostic X-ray Procedures, ORAUT-OTIB-0006, ORAU Dose Reconstruction Project, Cincinnati, Ohio, 2003

Kocher, D.C., and Eckerman, K.F., "Electron Dose-Rate Conversion Factors for External Exposure of the Skin from Uniformly Deposited Activity on the Body Surface," *Health Physics*, 53(2): 135-141, 1987

International Commission on Radiological Protection, "Age-dependent Doses to Members of the Public from Intake of Radionuclides: Part 4 Inhalation Dose Coefficients," ICRP Publication 71, 1995

International Commission on Radiological Protection, "Human Respiratory Tract Model for Radiological Protection," ICRP Publication 66, 1994

Laiche, T.P., and Scott, L.M., "A Radiological Evaluation of Phosphogypsum," *Health Physics*, Vol. 60(5): pp. 691-693, 1991

Lardinoye, M.H., and Weterings, K., Unexpected ^{226}Ra Build-up in Wet-Process Phosphoric Acid Plants, *Health Physics*, Vol. 42(4): pp. 503-514, 1982

Los Alamos National Laboratory (LANL), MCNP—A General Monte Carlo N-Particle Transport Code, Version 5, 2003

McGinley, Frank, Personal Communication, December 2002

National Council on Radiation Protection and Measurements (NCRP), "Exposure of the U.S. Population from Diagnostic Medical Radiation," NCRP Report No. 100, pg. 28, 1989

NIOSH (National Institute for Occupational Safety and Health), Estimation of Ingestion Intakes, Technical Information Bulletin, OCAS-TIB-00?, Office of Compensation Analysis and Support, Cincinnati, Ohio, 2004

NIOSH (National Instit ... nal Dose Reconstruction Implementatior ... nalysis and Support, Cincinnati, Ohio, 2002

Roessler, C.E., et al., ' ... te Materials," *Health Physics*, Vol. 37(3): pp. 269-

Scalsky, E.D., Technic ... te To be Used for EEOICPA Dose Reconstruction ... 21, 2003

Schleien, B., Birky, B., ... nd Radiological Health, Third Edition, Lippinc ... 98

Stolz, E.M., Jr., "Reco ... dings of the 2nd UN Int. Conf. PUAE 3, pg. 2

U.S. DOE Worker Adv ... http://tis.eh.doe

U.S. DOE, DOE Standard: Health Physics Manual of Good Practices for Uranium Facilities, (DOE-STD-1136-2000, Change Notice No. 3, December 2001). http://tis.eh.doe.gov/techstds/standard/std1136/STD11362000.pdf

U.S. DOE, FUSRAP, Radiological Survey of Chemicals Group, Olin Corporation (formerly Blockson Chemical Company), Joliet, Illinois; Argonne National Laboratory; DOE/EV-0005/35; ANL-OHS/HP-83-103, May 1983

U.S. DOE, FUSRAP Authority Review of the Former Blockson Chemical Company, Joliet, Illinois, 1985 [Blockson Chemical Company.IL.pdf, pg. 82]

U.S. DOE, Integrated Data Base Report—1996: U.S. Spent Nuclear Fuel and Radioactive Waste Inventories, Projections, and Characteristics, Revision 13; Office of Environmental Management; DOE/RW-0006, 1997

DOE Archives 301-903-5431

U.S. EPA, External Exposure to Radionuclides in Air, Water, and Soil; Federal Guidance Report No. 12, September 1993

U.S. NRC, Technical Basis for Calculating Radiation Doses for the Building Occupancy Scenario Using the Probabilistic RESRAD-BUILD 3.0 Code, NUREG/CR-6755, February 2002 (US NRC 2002a)

U.S. NRC, Health Physics Surveys in Uranium Recovery Facilities, Regulatory Guide 8.30, Revision 1, May 2002 (US NRC 2002b)

U.S. NRC, Re-evaluation of the Indoor Resuspension Factor for the Screening Analysis of the Building Occupancy Scenario for NRC's License Termination Rule, NUREG-1720; Draft Report for Comment, June 2002 (US NRC 2002c)

Wilkinson, G., "Uranium Recovery from Wet Process Phosphoric Acid; History and Present Status," AJChE, November 1976, [Blockson Chemical Co.IL.pdf, pg. 28]

Wilson, R.H., "The Hanford Uranium Bio-assay Program," Hanford Laboratories, General Electric Company, Richland, Washington; from Symposium on Occupational Health Experience and Practices in the Uranium Industry, HASL-58, October 15-17, 1958.

Wimpfen, Sheldon, Personal Communication, November 2002

SPECIAL EXPOSURE COHORT PETITION

Subsection F.3

Supporting Documentation

J.D. Hess & Associates
ENERGY - REGULATORY - COMPLIANCE

TELECOPY

June 12,2005

Re: Energy Employees Occupational Illness Compensation Program Act
Blockson Chemical Company, Document No. ORAUT-TKBS-0002

Dear

Per our recent discussion, I have conducted a review of the subject Technical Basis Document/Exposure Matrix. Unfortunately, I have not had the opportunity to obtain copies of, or review, some of the supporting Guidelines and Models referenced by this document. Nevertheless, it appears to me that the Exposure Matrix fails to fully consider the actual level of worker exposure to environmental hazards associated with the production of U_3O_8 "yellowcake" at the Blockson Chemical Plant.

Of primary concern is that the particle size typical of radioactive dust generated by this process is significantly smaller than 10 micron mean diameter (i.e. PM-10). Numerous studies have determined that a significant portion of dusts less than 5 micron collects in tissue deep in the lungs and can cause significant damage to surrounding tissue. It is not clear that the Matrix adequately accounts for the accumulation of material in the lungs other than using a "calculated" chronic intake rate of 24 pCi/day using broad assumptions that don't necessarily reflect more recent published research. This value does not appear to address the presence of the beta-emitting daughter isotopes Thorium-234 and Protoactinium-234. These isotopes have short half-lives of 24 days and a few hours, respectively. The Matrix also appears to fail to account for radioactive material that can be ingested as phlegm from previously inhaled matter.

Additionally, the assumptions of worker exposure to external radiation may be inappropriately drawing a correlation between mining operations using 1980's emissions control technology (i.e. baghouses, scrubbers, etc.) and the 1950's Blockson operation that used no dust suppression devices. It is also inappropriate to assume that the clothing the workers wore provided protection from alpha radiation when, according to studies done as early as 1949, cotton clothing actually retains uranium oxides and is difficult to wash out using conventional soaps or detergents. This, in combination to the presence of sweat, lotions, or wetness, would result in uranium (and its daughter isotopes) being in almost constant contact with the skin for periods exceeding the presumed 8-hours per day. This type of exposure is reported to result in thinning of the skin and increasing the solubility thereby increasing absorption of the radioisotopes.

I hope that this initial review addresses some of your concerns. I should be able to secure additional documents referenced by the Exposure Matrix in the near future.

Sincerely,

James D. Hess

2421 E. Dundee Rd., Arlington Heights, IL 60004 PHONE: (847)419-0496 EMAIL: jdhess @comcast.net

01-26-06 P01:06 IN

January 23, 2006

SEC 00045
Office of Compensation Analysis and Support
NIOSH MS-C-47
4676 Columbia Parkway
Cincinnati, Ohio

RE: SPECIAL EXPOSURE COHORT PETITION (Revised)

Dear Sir or Madam:

As you may be aware, we previously submitted a petition to have Blockson Chemical added to the Special Exposure Cohort. During our telephone conference with NIOSH, we were informed that our petition was deficient in several respects.

The original 30 day time period to submit our corrected petition has elapsed. As such, we have completed a new petition and included new supporting documentation. Alternatively, this can be considered a supplement to previously filed petition.

If you have any questions, please do not hesitate to contact me. Thank you in advance for your cooperation.

Special Exposure Cohort Petition
under the Energy Employees Occupational Illness Compensation Act

U.S. Department of Health and Human Services
Centers for Disease Control and Prevention
National Institute for Occupational Safety and Health

OMB Number: 0920-0639 Expires: 05/31/2007

Special Exposure Cohort Petition — Form B

Use of this form and disclosure of Social Security Number are voluntary. Failure to use this form or disclose this number will not result in the denial of any right, benefit, or privilege to which you may be entitled.

General Instructions on Completing this Form *(complete instructions are available in a separate packet)*:

Except for signatures, please **PRINT** all information clearly and neatly on the form.

Please read each of Parts A — G in this form and complete the parts appropriate to you. If there is more than one petitioner, then each petitioner should complete those sections of parts A – C of the form that apply to them. Additional copies of the first two pages of this form are provided at the end of the form for this purpose. A maximum of three petitioners is allowed.

If you need more space to provide additional information, use the continuation page provided at the end of the form and attach the completed continuation page(s) to Form B.

If you have questions about the use of this form, please call the following NIOSH toll-free phone number and request to speak to someone in the Office of Compensation Analysis and Support about an SEC petition: **1-800-356-4674.**

If you are:			
	☐ A Labor Organization,	Start at D	on Page 3
	☐ An Energy Employee (current or former),	Start at C	on Page 2
	☐ A Survivor (of a former Energy Employee),	Start at B	on Page 2
	☒ A Representative (of a current or former Energy Employee),	Start at A	on Page 1

A Representative Information — Complete Section A if you are authorized by an Employee or Survivor(s) to petition on behalf of a class.

A.1 **Are you a contact person for an organization?** ☐ Yes (Go to A.2) ☒ No (Go to A.3)

A.2 **Organization Information:**

Name of Organization

Position of Contact Person

A.3 **Name of Petition Representative:**

MR./MRS./MS. First Name Middle Initial Last Name

A.4 **Address:**

Apt # P.O. Box

City State Zip Code

A.5 **Telephone Num**

A.6 **Email Address:**

A.7 ☒ Check the box at left to indicate you have attached to the back of this form written authorization to petition by the survivor(s) or employee(s) indicated in Parts B or C of this form. An authorization

If you are representing a Survivor, go to Part B; if you are representing an Employee, go to Part C.

Name or Social Security Number of First Petitioner _____